PEAK®

AMGO® Original

Installation And Service Manual

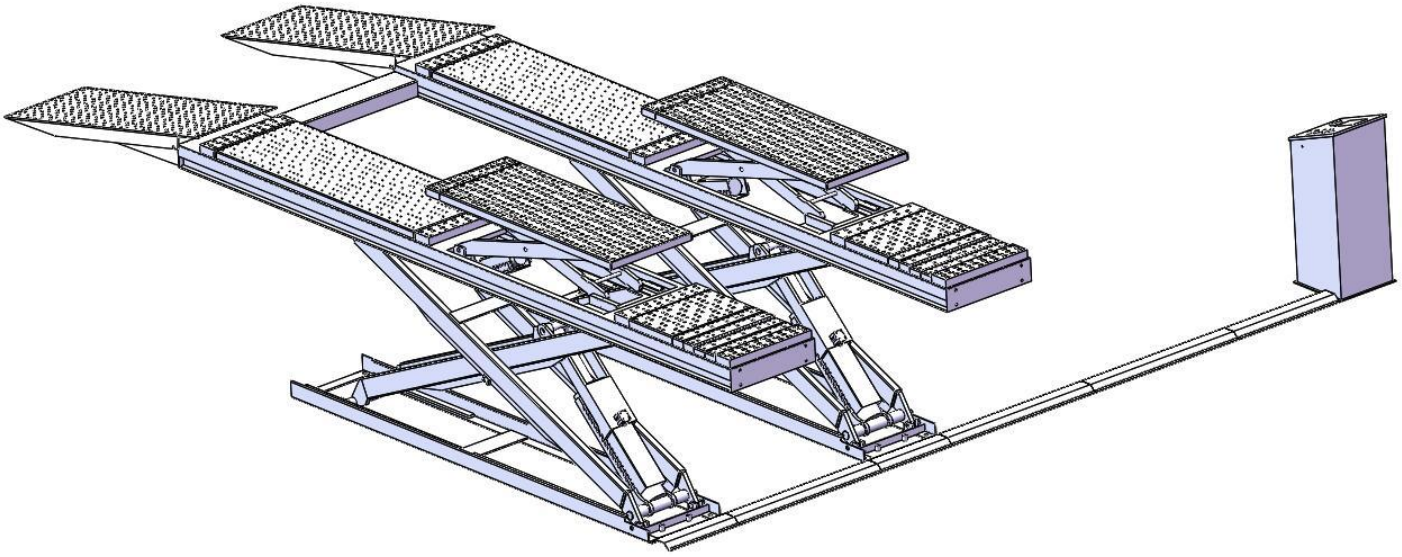

SCISSORS LIFT

Model: DX-5500A

CONTENTS

I. PRODUCT FEATRUES AND SPECIFICATIONS

Double Scissors Lift

Model DX-5500A

· Electric- air control system, mechanical safety locks

· Dual synchronous cylinders are applied to assure the lifting level on both platforms

· Photo cell device protection, avoid vehicle collapse

· Non-skid diamond platforms.

· Double scissors structure, fit for a wide range vehicle of car to van and light truck

· Optional Turnplate.

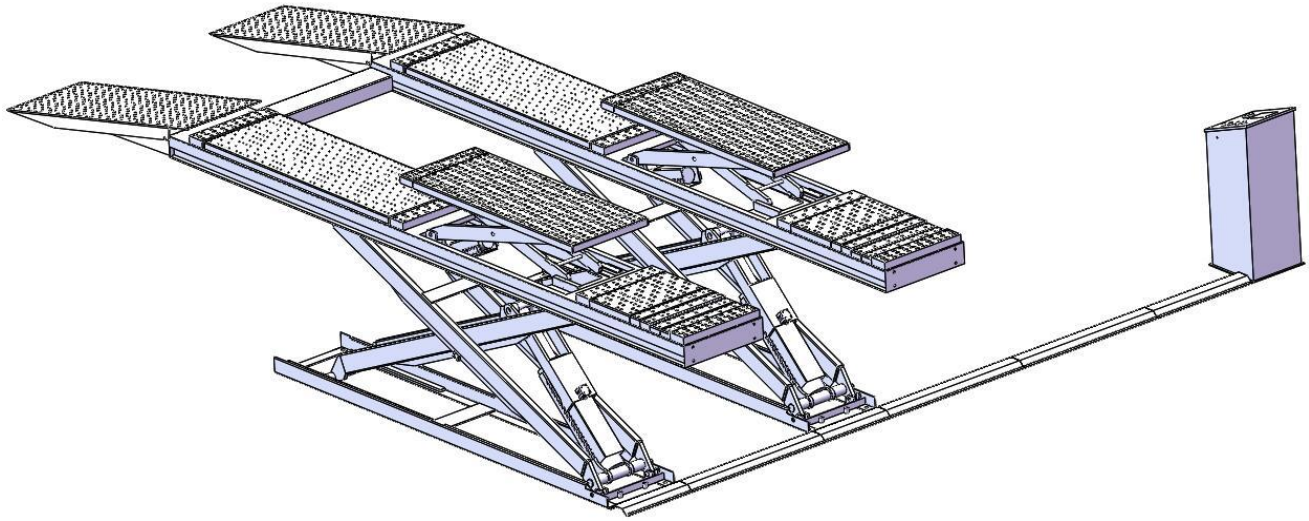

Fig. 1

Model DX-5500A SPECIFICATIONS

Model	Lifting Capacity	Lifting Height	Min. Height	Lifting Time	Overall Length (Inc. Ramps)	Overall Width	Runway Width	Distance Between Platform	Gross Weight	Motor
DX-5500A	5500kg 12000 lbs	1870mm 73 5/8″	305mm 11″	64S	6527mm 256 ″	2190mm 86 1/4″	625mm 24 5/8″	940mm 37″	2400Kg 4,263 lbs	4.0HP

II. INSTALLATION REQUIREMENT

A. TOOLS REQUIRED

✓ Rotary Hammer Drill (Φ19, Φ10, Φ4,)

✓ Carpenter's Chalk

✓ Hammer

✓ Screw Sets

✓ Level Bar

✓ Tape Measure (7.5m)

✓ English Spanner (12")

✓ Pliers

✓ Ratchet Spanner With Socket (28#)

✓ Lock Wrench

✓ Wrench Set (8#, 14#, 15#, 17#, 19#)

✓ Grease gun

Fig. 2

B. SPECIFICATIONS OF CONCRETE

Specifications of concrete must be adhered to the specification as following. Failure to do so may result in lift and/or vehicle falling.

1. Concrete must be thickness 150mm minimum and without reinforcing steel bars, and must be dried completely before the installation.
2. Concrete must be in good condition and must be of test strength 3,000psi (210kg/cm²) minimum.
3. Floors must be level and no cracks.

C. POWER SUPPLY

The electrical source must be 3.0KW minimum. The source cable size must be 2.5mm² and in good condition of contacting with floor.

III. STEPS OF INSTALLATION

A. Location of Installation

Check and insure the installation location (concrete, layout, space size etc.) is suitable for lift installation.

1. For Standard Installation: On surface installation

1.1 Installation dimension for DX-5500A **(See Fig. 3)**.

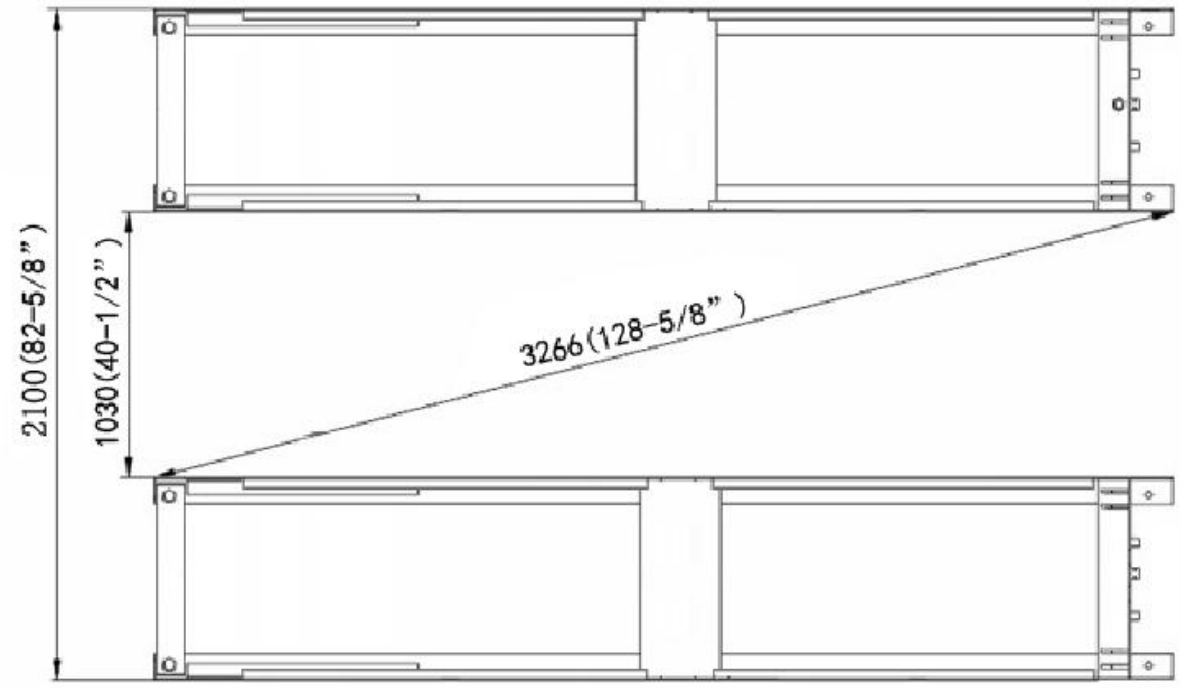

Fig. 3

1.2 Illustration of DX-5500A on surface installation **(See Fig.4)**.

Noted:
Control cabinet can be installed at the left side or the right side of drive in direction. Below figure show the control cabinet installed at the left side of drive in direction.

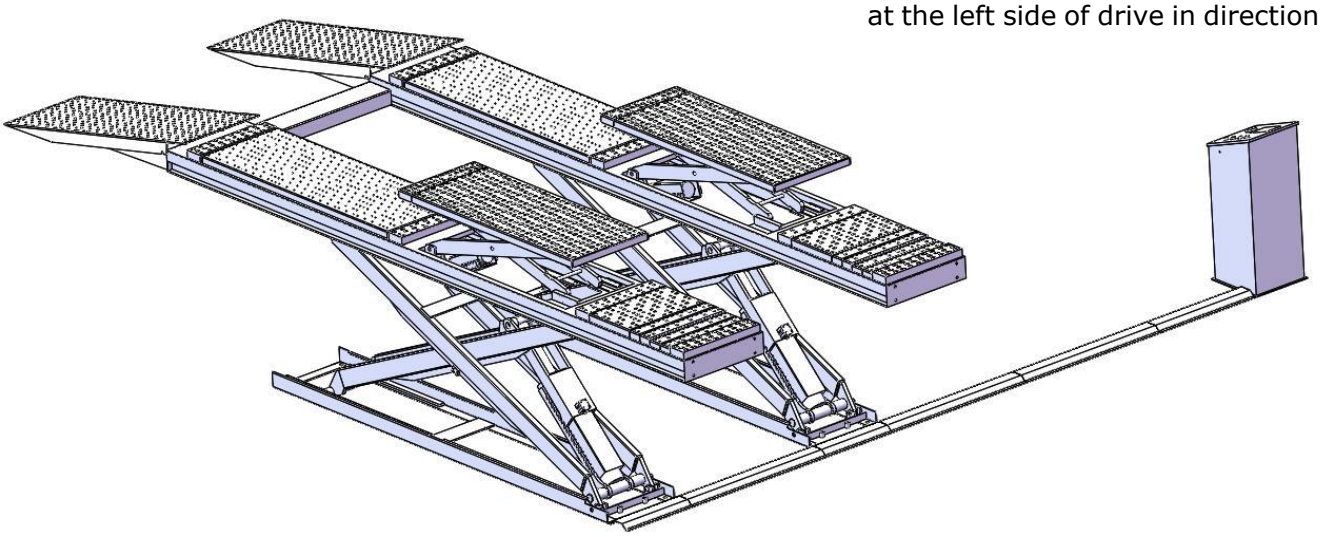

Fig. 4

2. For Optional Installation: Flush mount installation

2.1 Flush Mount Installation Foundation **(Fig.5)**.

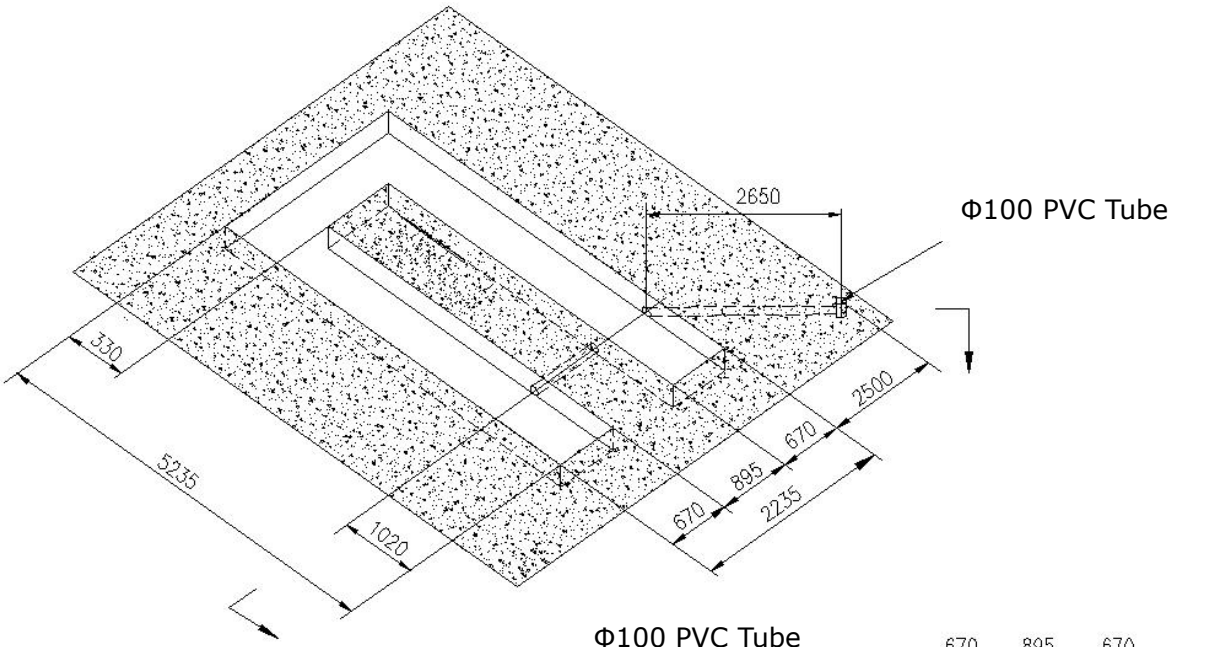

1. Concrete must be thickness 100mm minimum, and test strength 3,000psi (210kg/cm²) minimum.
2. Useφ100mm PVC Tube

Fig. 5

2.2 Illustration of DX-5500A flush mount installation **(Fig.6).**

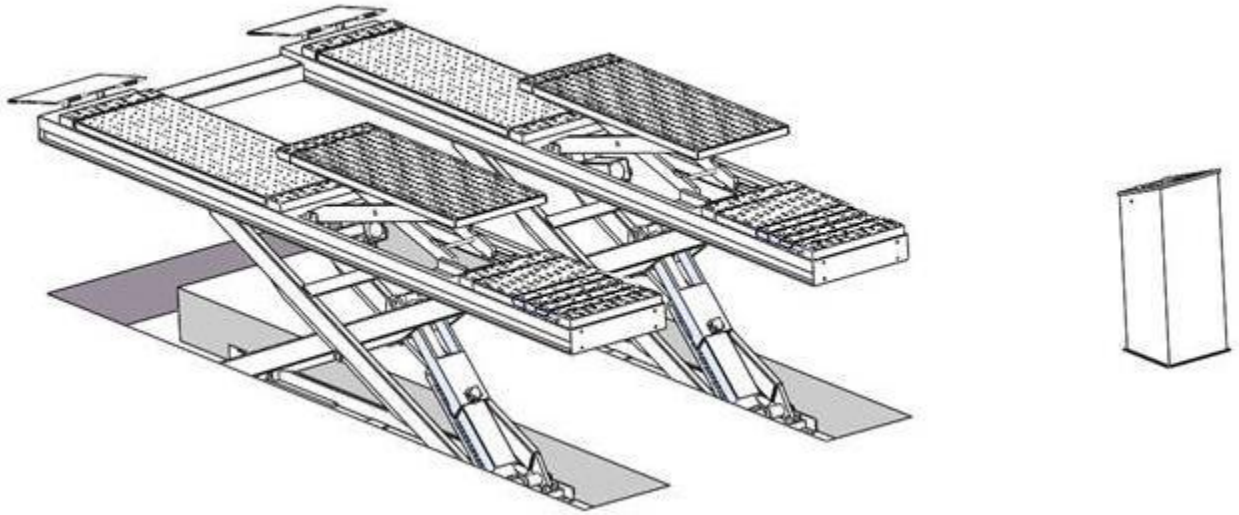

Fig. 6

B. Check the parts before assembly.

1. Packaged lift and control cabinet **(See Fig. 7).**

Fig. 7

2. Move aside the lift with fork lift or hoist, and open the outer packing carefully

2.1 Parts for lift on surface installation **(See Fig.8)**

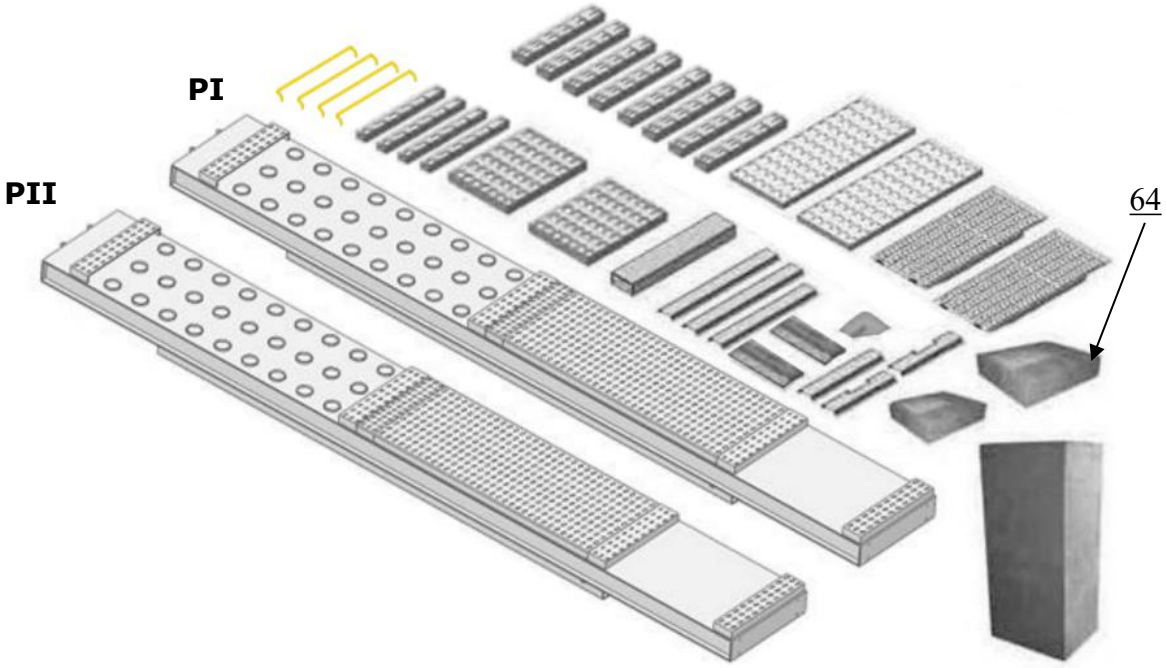

Fig. 8

2.2 Parts for lift of flush mount installation **(See Fig.9)**

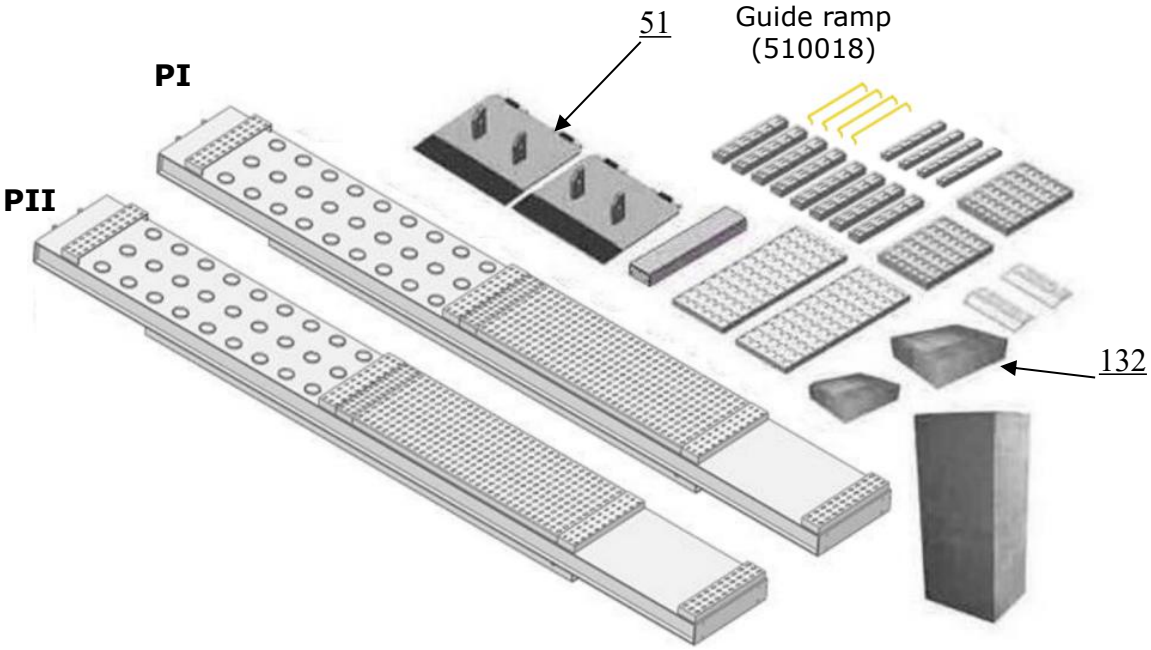

Fig. 9

3. Open the parts box, check the parts according to the part list **(See Fig. 10)**.

Fig.10

4. Check the parts of the parts bag according to the parts bag list.

4.1 Pasts bag for lift on surface installation **(See Fig.11)**

Fig. 11

4.2 Parts bag for lift of flush mount installation **(See Fig.12)**

Fig. 12

C. Layout and installation of oil system and air line system.

1. Select a location and lay out the lift according to step **A (See Fig. 13)**.
   Noted: The control cabinet can be installed on the left or right of the model according to the site.

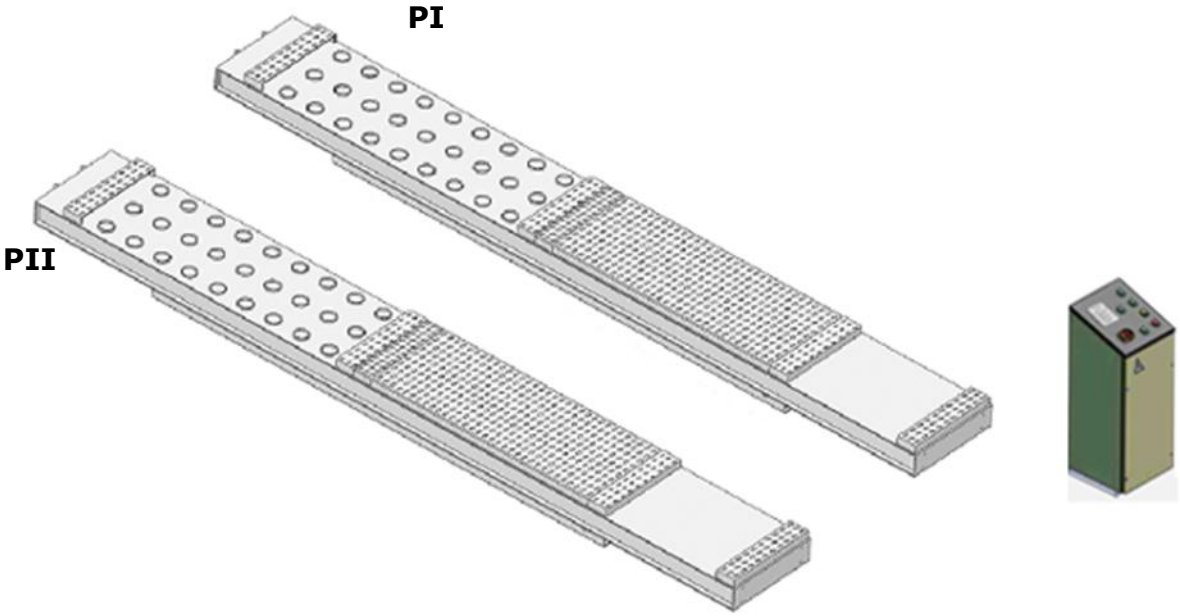

Fig. 13

2. Connecting the cylinders' oil hose and air line of the main scissors. **(See Fig. 14)**

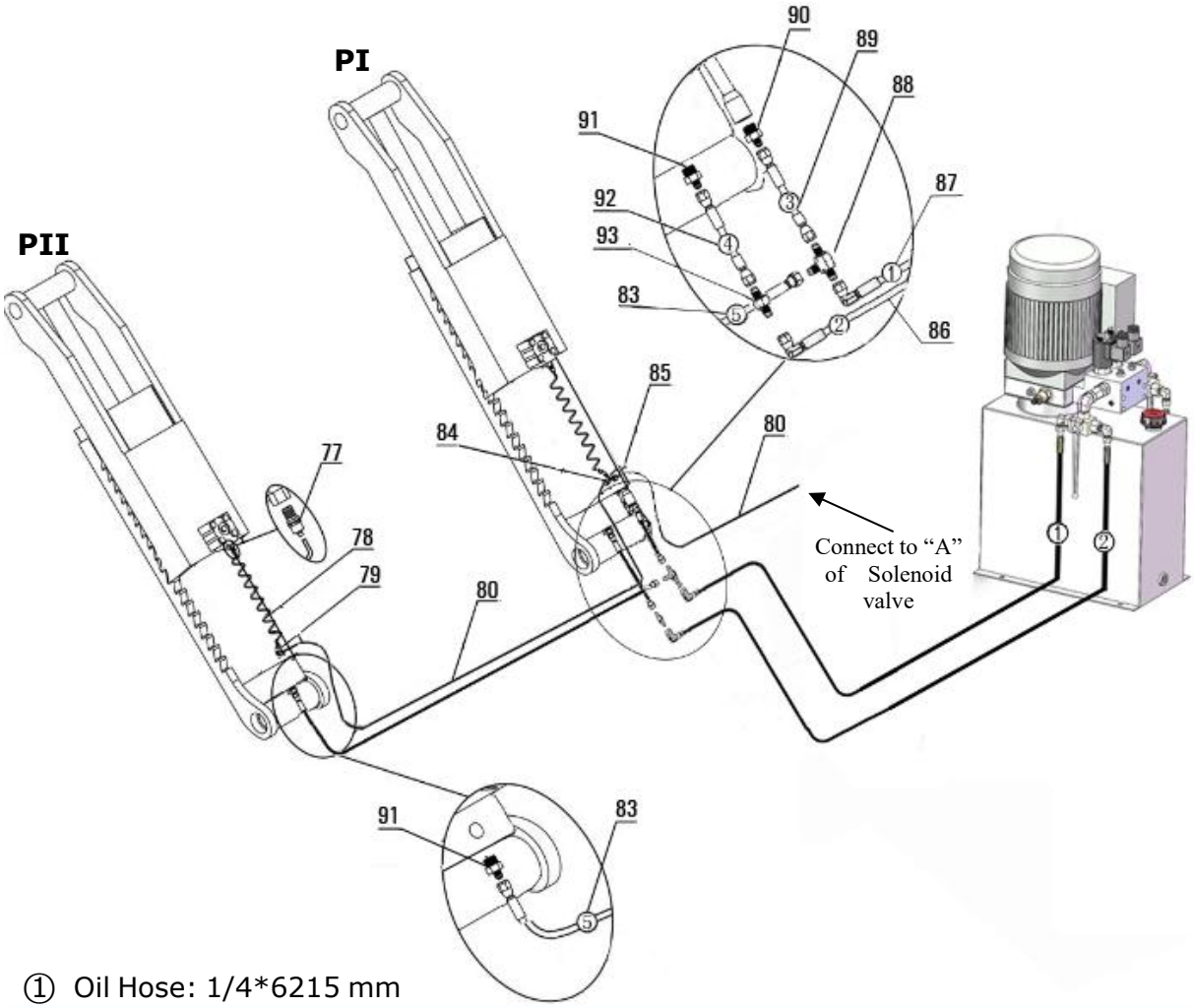

① Oil Hose: 1/4*6215 mm

② Oil Hose: 1/4*6135 mm

③ Oil Hose: 1/4*285 mm

④ Oil Hose: 1/4*285 mm

⑤ Oil Hose: 1/4*1870 mm

Fig. 14

3.Connect the cylinders' oil hose and air line of the secondly scissors. **(See Fig. 15)**

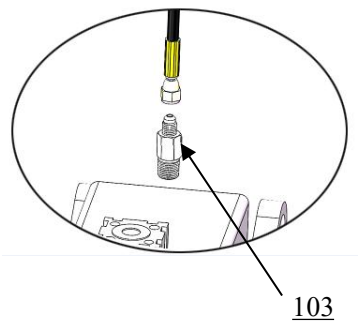

⑥ Oil hose 1/4*5500 mm

⑦ Oil hose 1/4*5500 mm

⑧ Oil hose 1/4*5500 mm

⑨ Oil hose 1/4*6800 mm

⑩ Oil hose 1/4*5350 mm

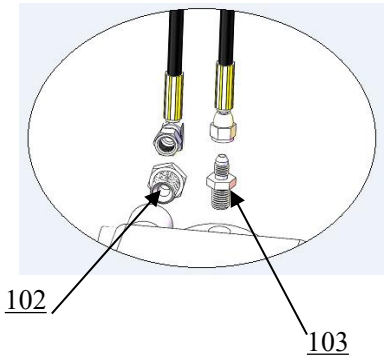

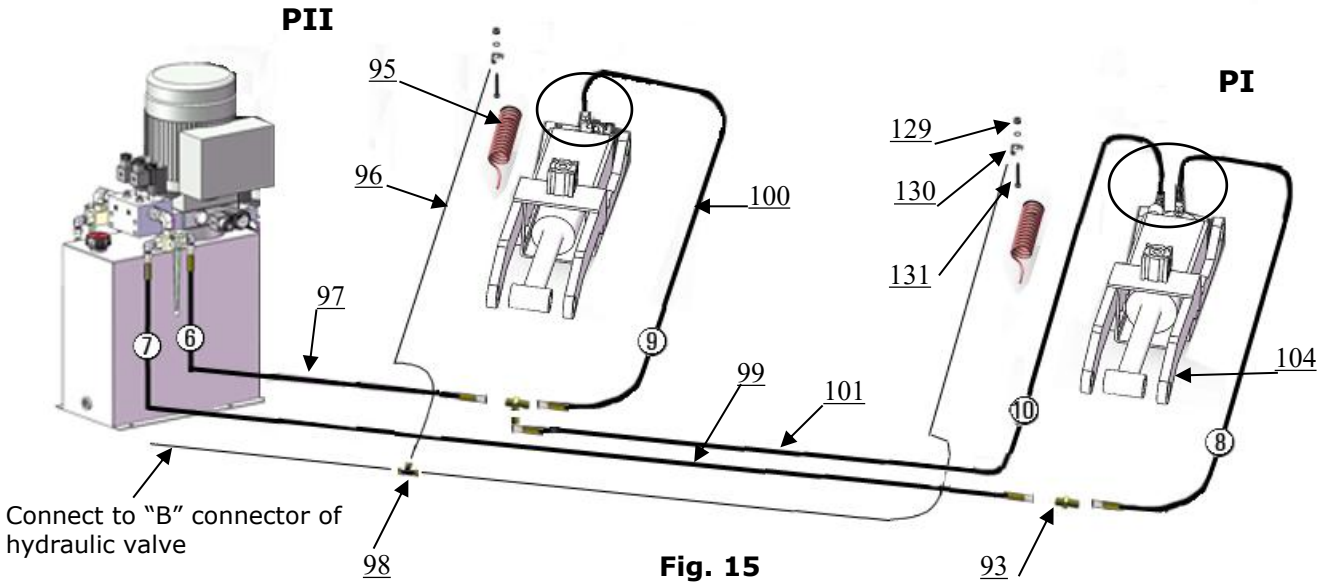

Fig. 15

4. Install the oil-water separator **(See Fig. 16)**.

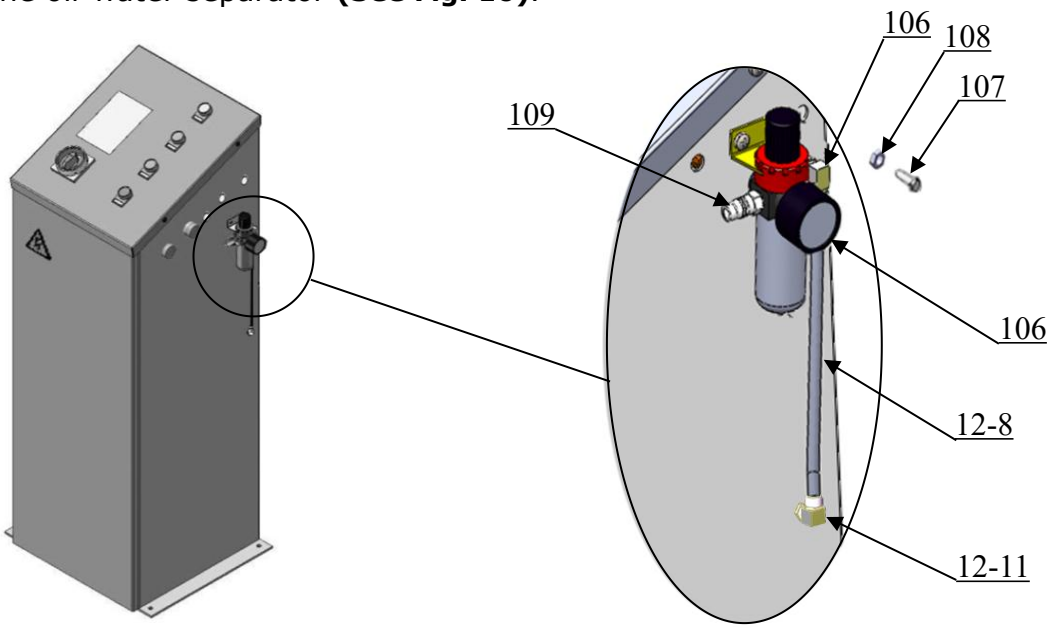

Fig. 16

Connect the air source by the oil-water separator

5.Connecting the air source (air pressure 5kg/cm^2- 8kg/cm^2), adjust the air pressure to 0.8MPa **(See Fig. 17)**.

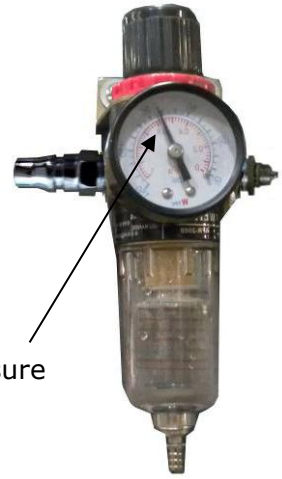

Clockwise to increase the air pressure
Counter-clockwise to reduce the air pressure
Adjust the air pressure to 0.8MPa

Fig. 17

D. Install electric system

1. Wire connection of three phase hydraulic power unit **(380V)**

1.1 Connect the power wire and limit switch wire according to the wiring diagram

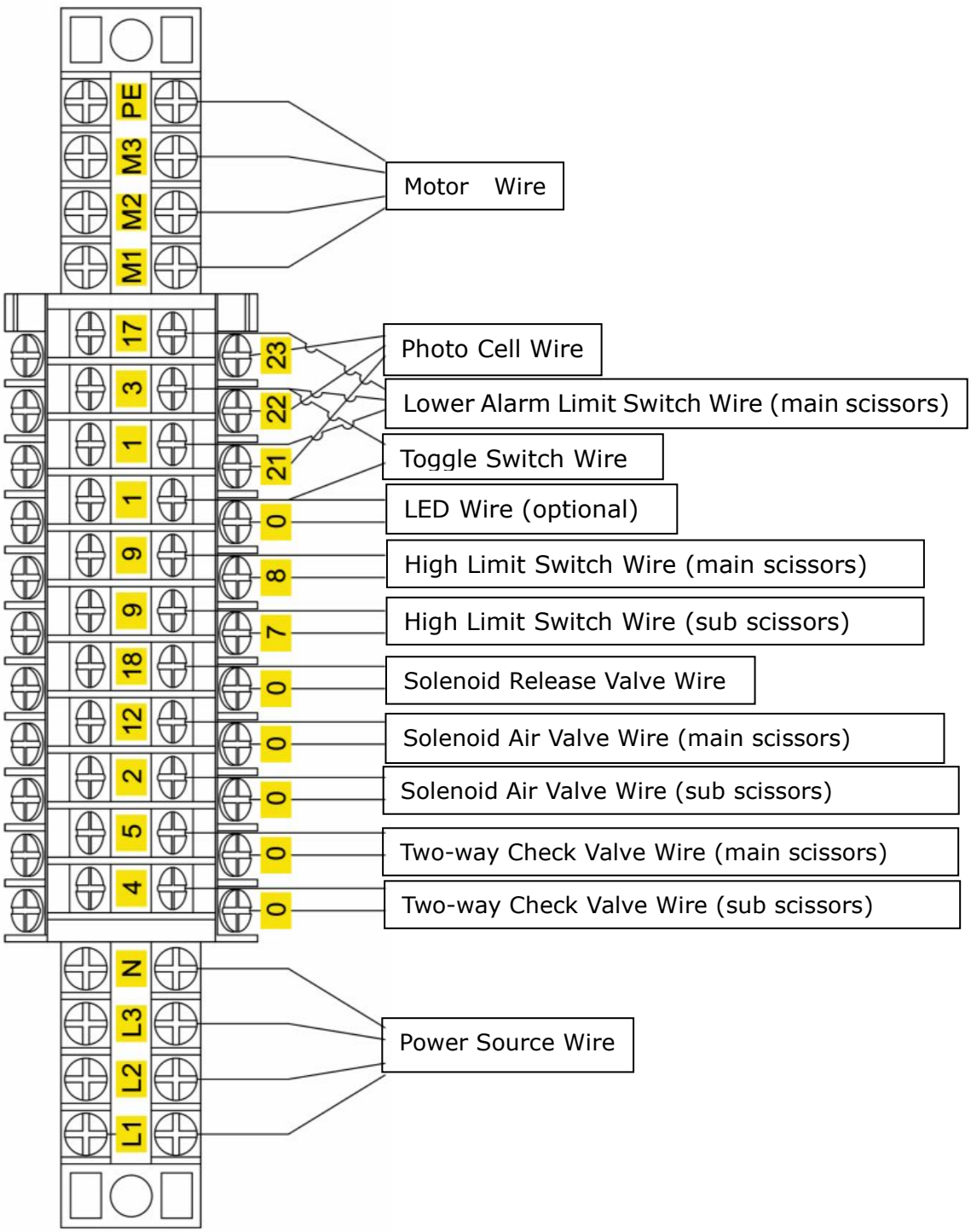

Fig. 18

380V Electric Component

Item	Name	Code	Specification	Item	Name	Code	Specification
1	Power switch	QS	25A	16	Two-way check solenoid valve(main scissor)	YA	AC24V
2	Breaker	FU1	3P	17	Two-way check solenoid valve(sub scissor)	YB	AC24V
3	Breaker	FU2	1P	18	Air solenoid valve	A1 A2	AC24V
4	Breaker	FU3	1P	19	Solenoid release valve	Y	AC24V
5	AC contactor	KM	16A/AC24V	20	Push button	UP1	Triple
6	Buzzer	H	AC24V	21	Push button	UP2	Duplex
7	Transformer	TC	24VAC	22	Push button	Lock1	Triple
8	Indicator light	R	24V White	23	Push button	Lock2	Duplex
9	Lower Alarm Button	Pass	Duplex	24	Push button	Down1	Triple
10	Motor	M	3 Phase	25	Push button	Down2	Duplex
11	Rectifier bridge	UR	KBPC10-10	26	High limit switch for main scissor	SQ1	8108(10A)
12	Photo cell device	SP	DC24V	27	Low limit switch for main scissor	SQ2	8108(10A)
13	Intermediate relay	KA3	DC24V	28	Limit switch	SQ3	8104(10A)
14	Intermediate relay	KA1 KA2	AC24V	29	Toggle Switch	ST	
15	Time relay	KT	AC24V				

1.2 Circuit Diagram **(See Fig. 19)**

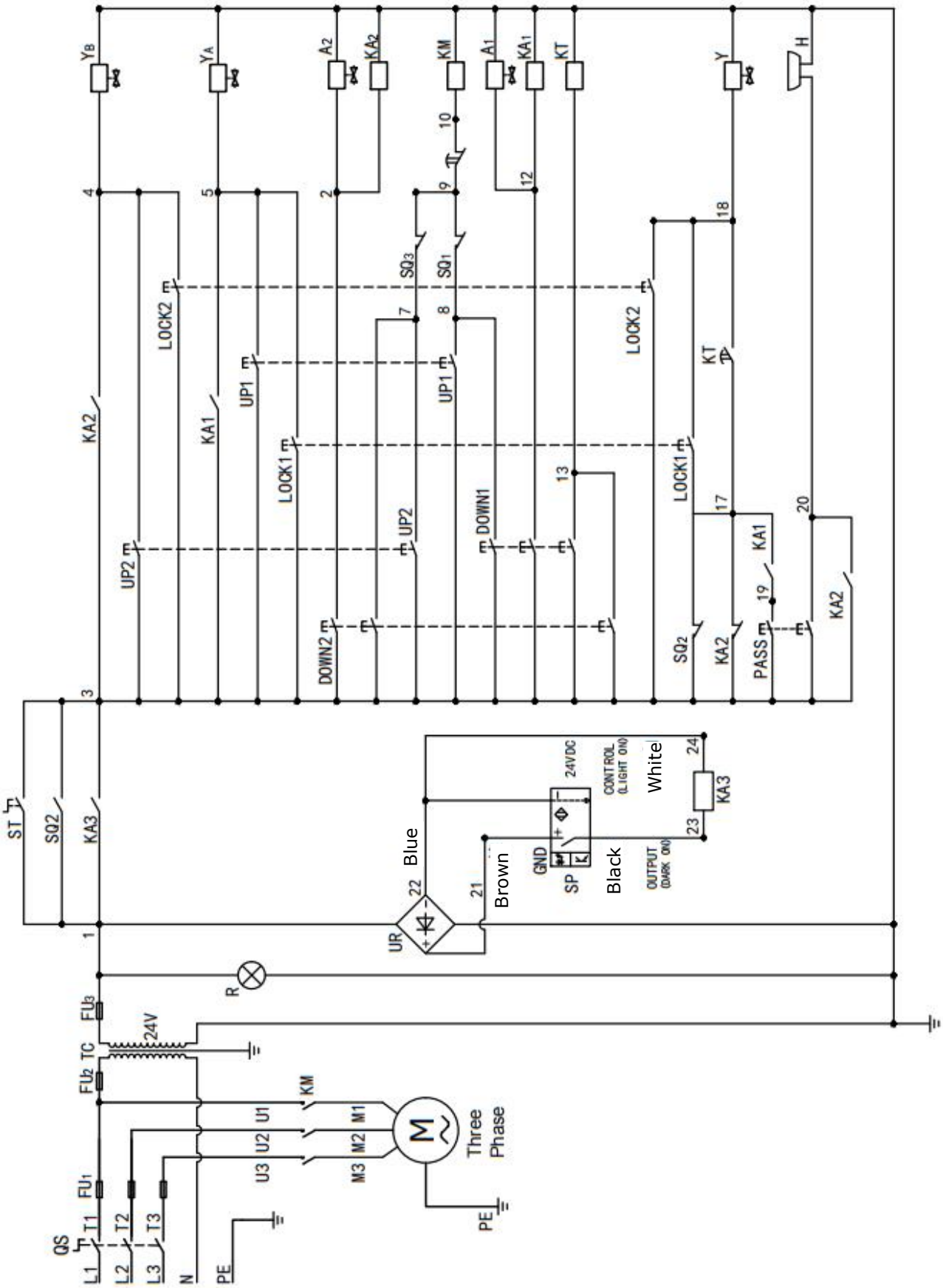

Fig. 19

2.Wire connection of hydraulic power unit **(220V)**

2.1 Connect the power wire and limit switch wire according to the wiring diagram (**See Fig. 20)**

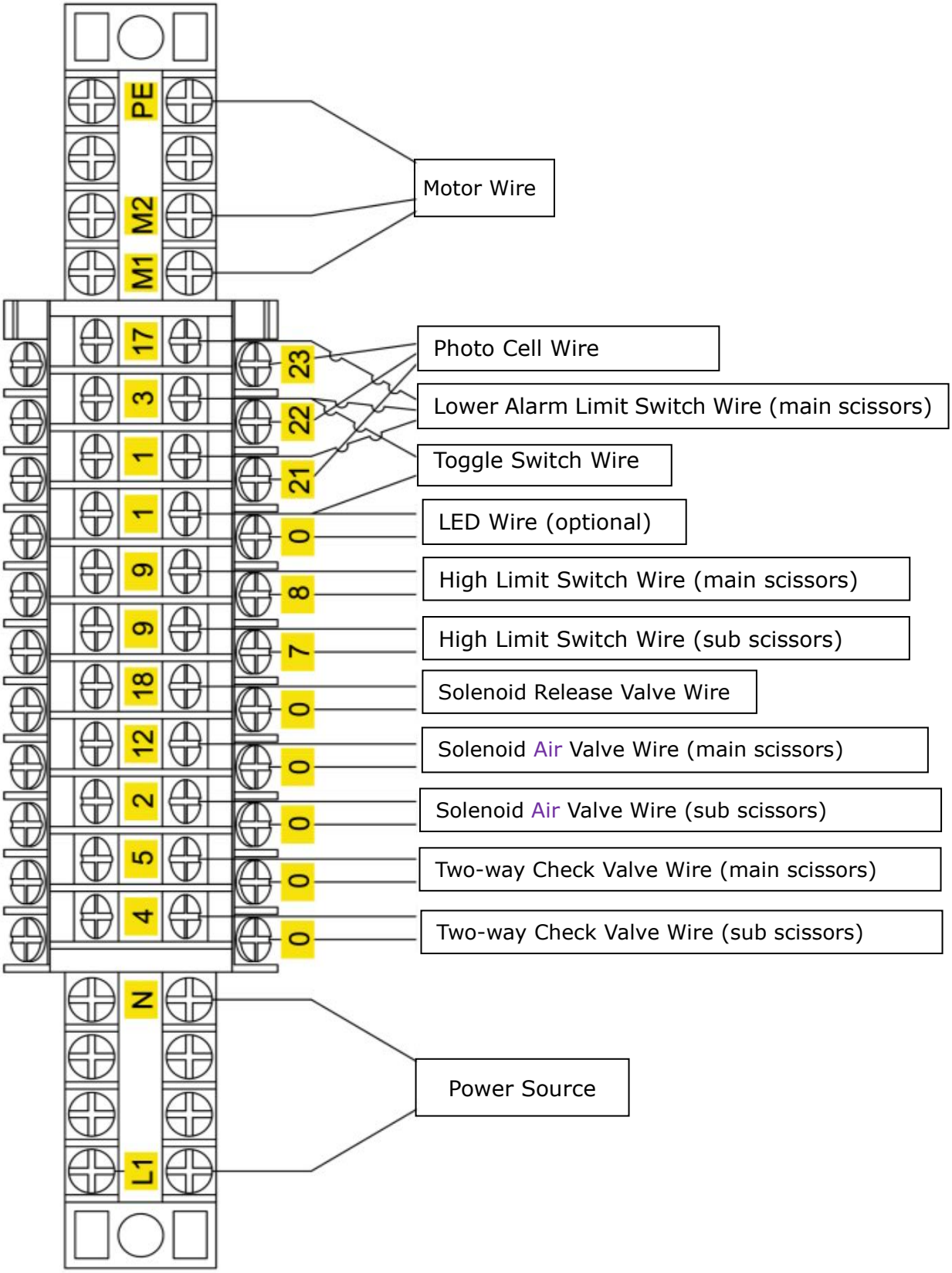

Fig. 20

220V Electric Component

Item	Name	Code	Specification	Item	Name	Code	Specification
1	Power switch	QS	25A	16	Two-way check solenoid valve(main scissor)	YA	AC24V
2	Breaker	FU1	2P	17	Two-way check solenoid valve(sub scissor)	YB	AC24V
3	Breaker	FU2	1P	18	Air solenoid valve	A1 A2	AC24V
4	Breaker	FU3	1P	19	Solenoid release valve	Y	AC24V
5	AC contactor	KM	16A/AC24V	20	Push button	UP1	Triple
6	Motor	M	Single Phase	21	Push button	UP2	Duplex
7	Transformer	TC	24VAC	22	Push button	Lock1	Triple
8	Indicator light	R	24V White	23	Push button	Lock2	Duplex
9	Lower Alarm Button	Pass	Duplex	24	Push button	Down1	Triple
10	Buzzer	H	AC24V	25	Push button	Down2	Duplex
11	Rectifier bridge	UR	KBPC10-10	26	High limit switch for main scissor	SQ1	8108(10A）
12	Photo cell device	SP	DC24V	27	Low limit switch for sub scissor	SQ2	8108(10A）
13	Intermediate relay	KA3	DC24V	28	Limit switch	SQ3	8104(10A）
14	Intermediate relay	KA1 KA2	AC24V	29	Toggle Switch	ST	
15	Time relay	KT	AC24V				

2.2 Circuit Diagram **(See Fig. 21)**.

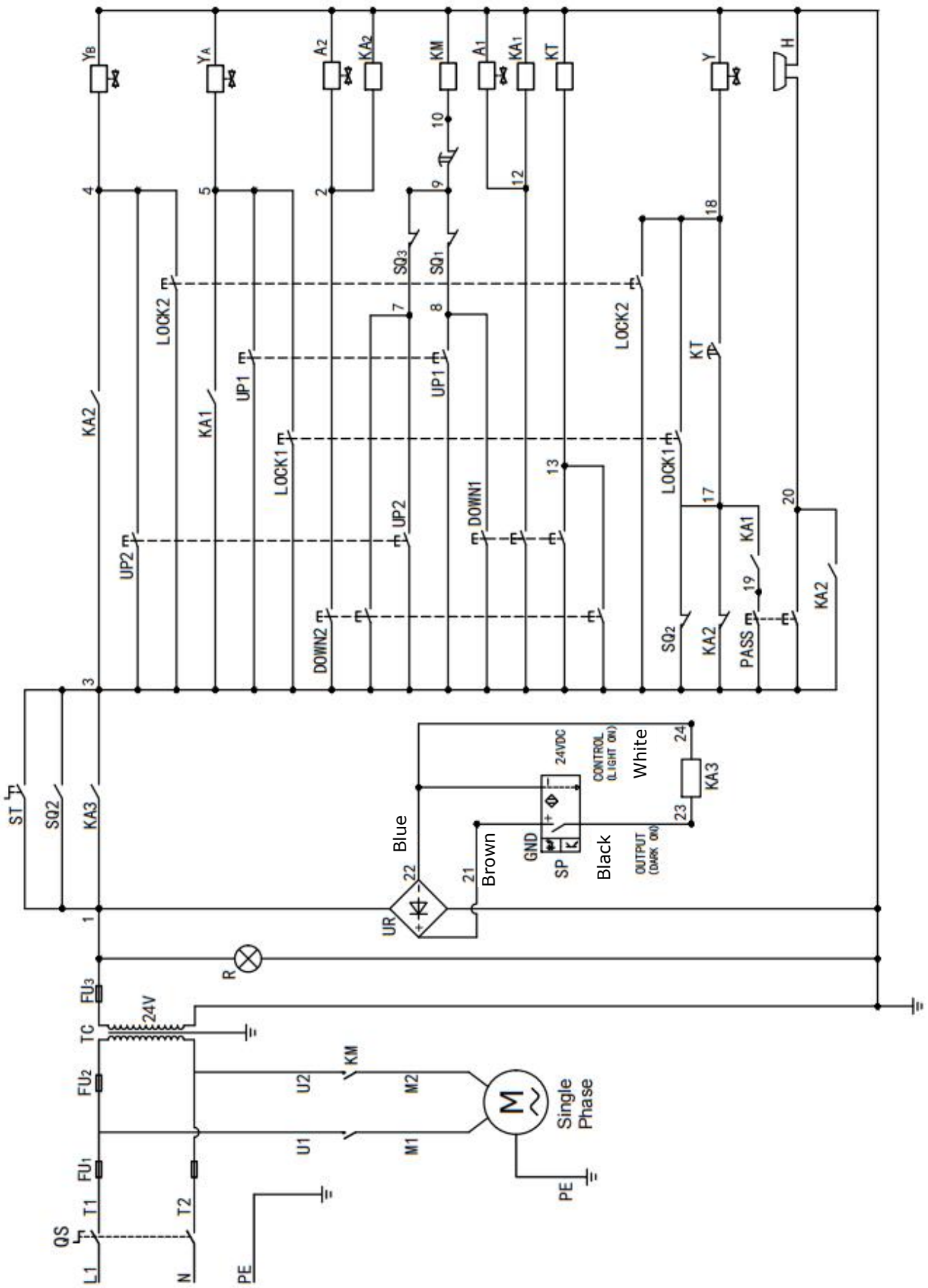

Fig. 21

IV. Test Run

A. Fill oil to cylinder and Synchronous adjustment

1. Fill reservoir with Hydraulic Oil **(Note: In consideration of power unit's durability, please use <u>Hydraulic Oil 46#</u>).**
2. Turn on the power, push the button **UP**, and check the rotated direction of the motor. (Only for 3 phase motor). Shut off power and exchange the phase connection if the motor rotated direction is wrong.

B. Synchronous adjustment

1. Remove the protective cover of photo cell.

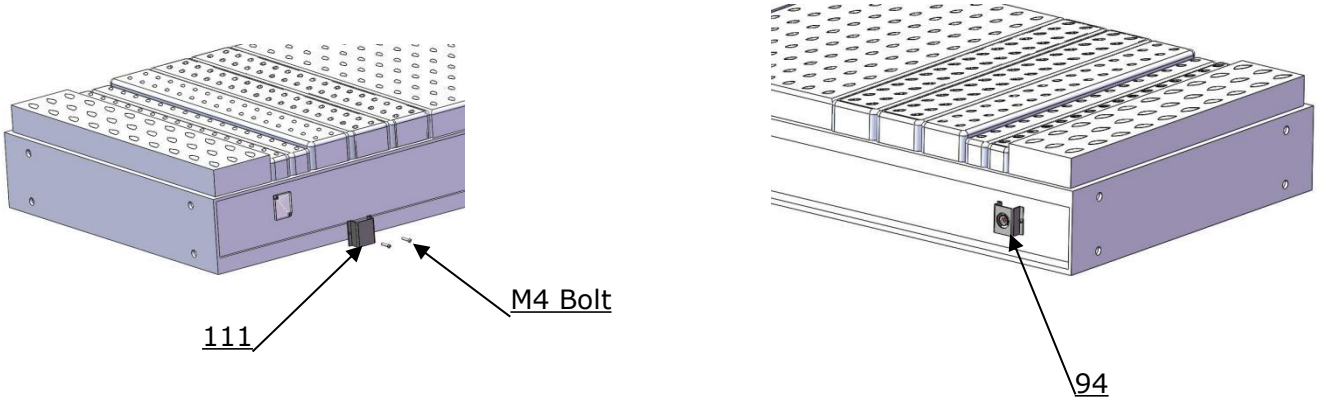

Fig 22

2. Turn the toggle switch to "ON".

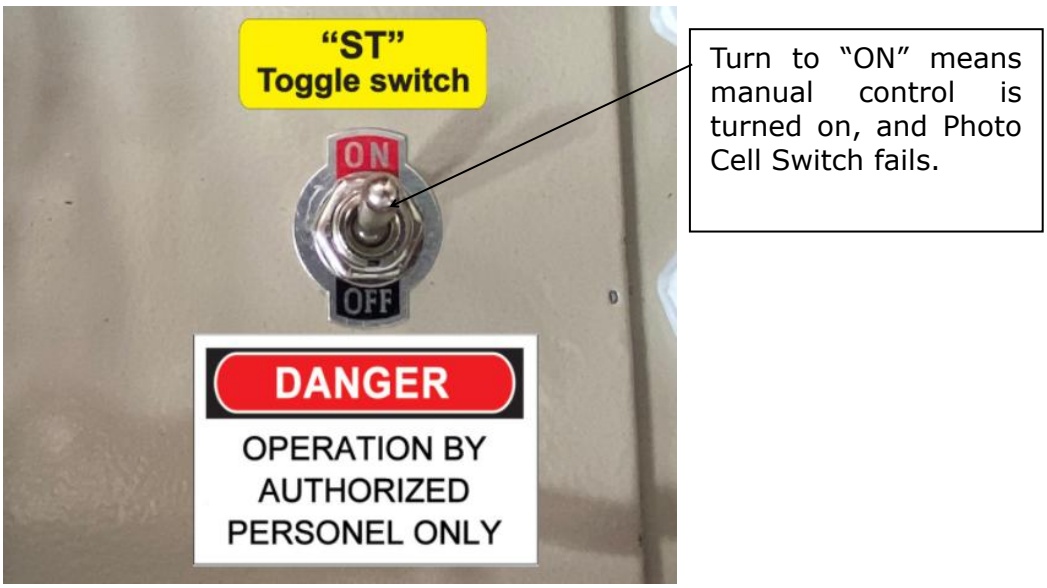

Fig 23

3. Synchronous adjustment of main scissors (Lower both platforms to the lowest position).

a. Turn the Two-way valve to oil filling position (**See Fig.25**), push button **UP** for main scissors and fill oil to the secondly cylinder until it full. Then hold down the button **DOWN** and **PASS** of main scissors for 5 seconds to bleed the air, with Buzzer sound and bleeding sound from oil tank. Repeat this step 2-3 times until no air in the hydraulic system (normally repeat two times the air will be bleed off).

b. Quickly click button **UP** until the platforms just to be lifted up, then stop.

c. Turn the Two-way valve to normal working position (**See 26**), push button **UP** for main scissors to rise the lift. Check if both platforms are at the same height, if not, reply Step a and b, till the two safety devices can be locked or released at the same time.

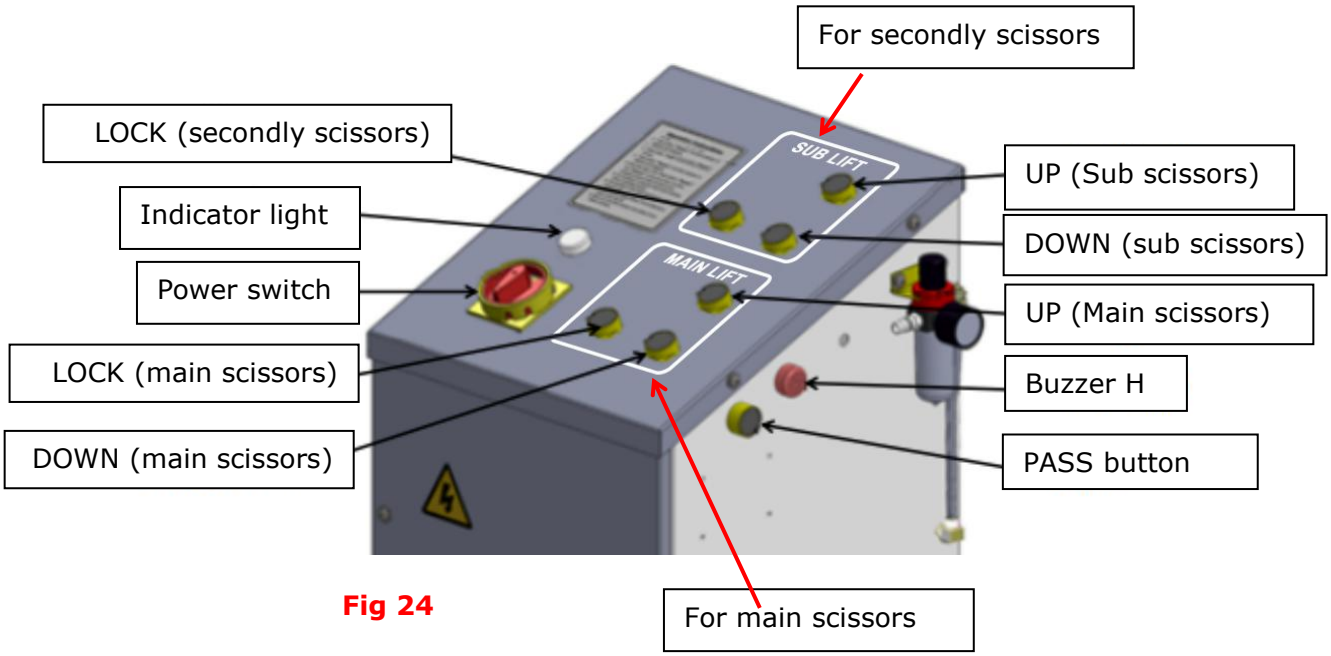

Fig 24

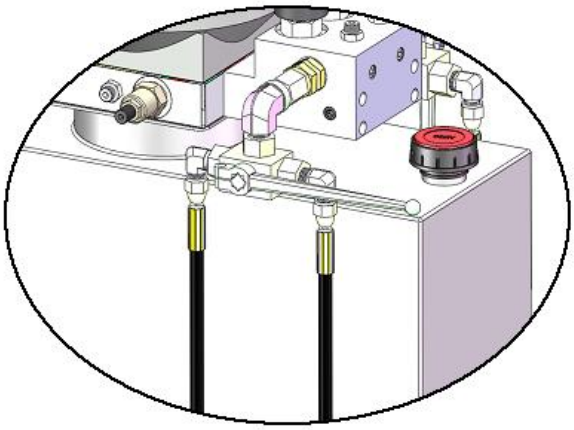

Oil Filling Position

Fig. 25

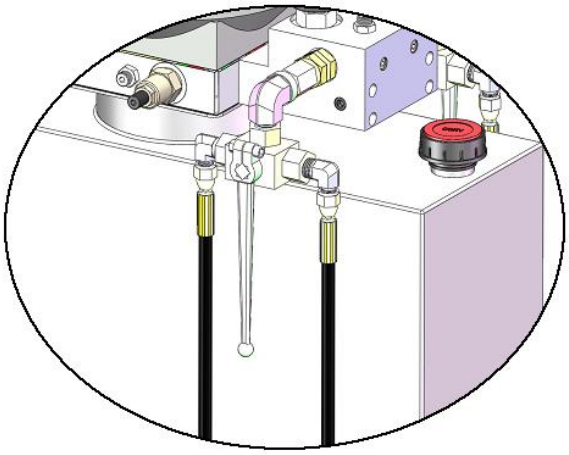

Normal Working Position

Fig. 26

4.Synchronous adjustment of sub scissors (Lower both platforms to the lowest position).

a. Turn the Two-way valve to oil filling position (**See Fig. 28**), push button **UP** for sub scissors and fill oil to the secondly cylinder until full, and then hold down the button **DOWN** and **PASS** of sub scissors for 5 seconds to bleed the air, with Buzzer sound and bleeding sound from oil tank. Repeat this step 2-3 times until no air in the hydraulic system (normally repeat two time the air will be bleed off).

b. Quickly click button **UP** until the platforms just to be lifted up, then stop.

c. Turn the Two-way valve to normal working position (**See Fig. 29**), push button **UP** for sub scissors to rise the lift, check if both platforms are at the same height, if not, reply Step a and b, till the two safety devices can be locked or released at the same time.

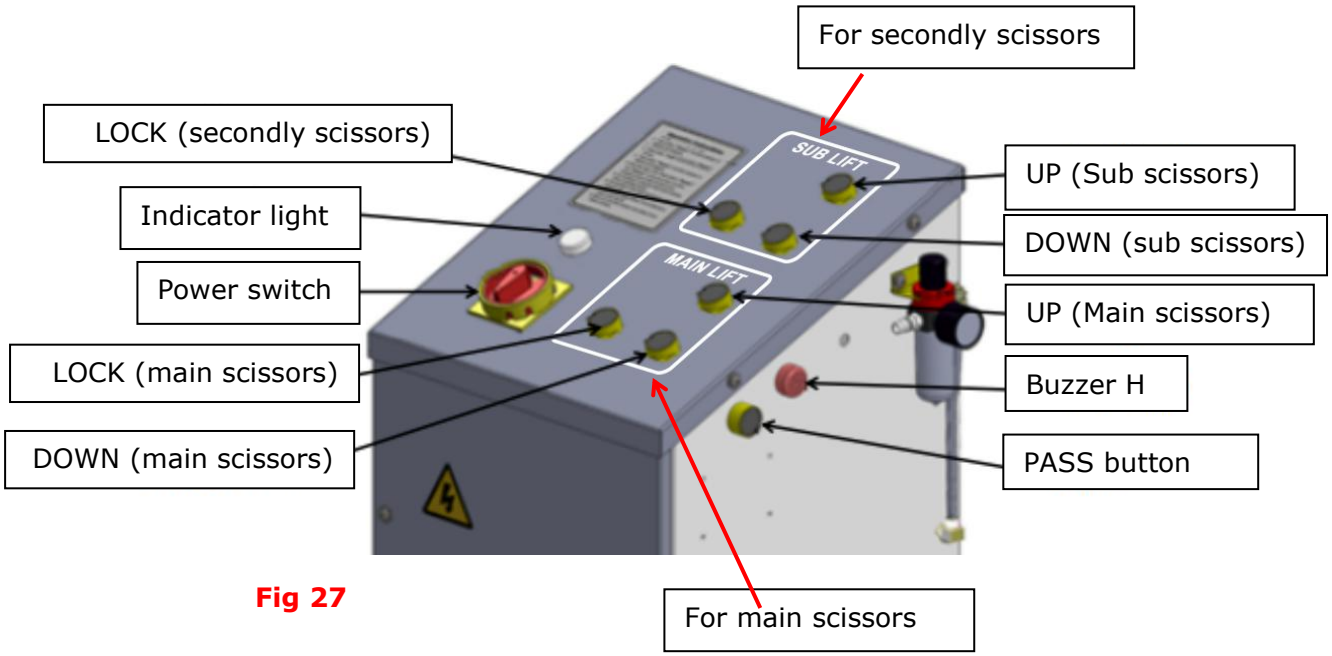

Fig 27

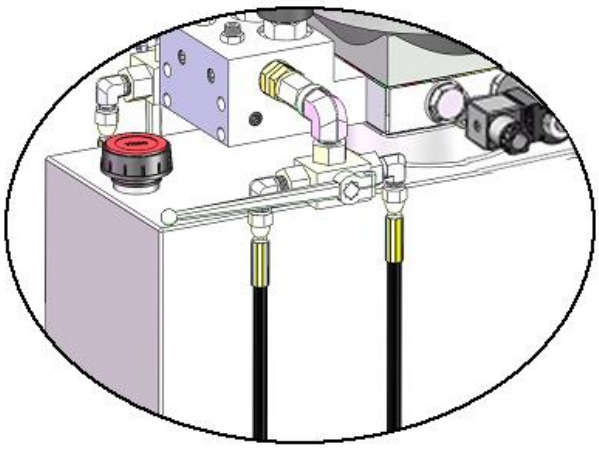

Oil Filling Position

Fig.28

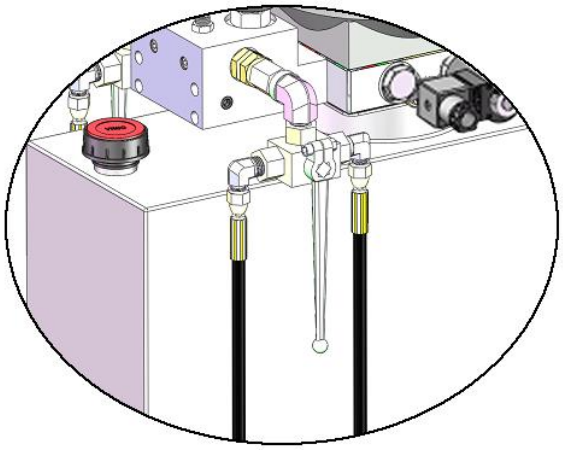

Normal Working Position

Fig. 29

5. Tune off toggle switch after Synchronization, turn the toggle switch to "OFF", the photo cell device is turned on.

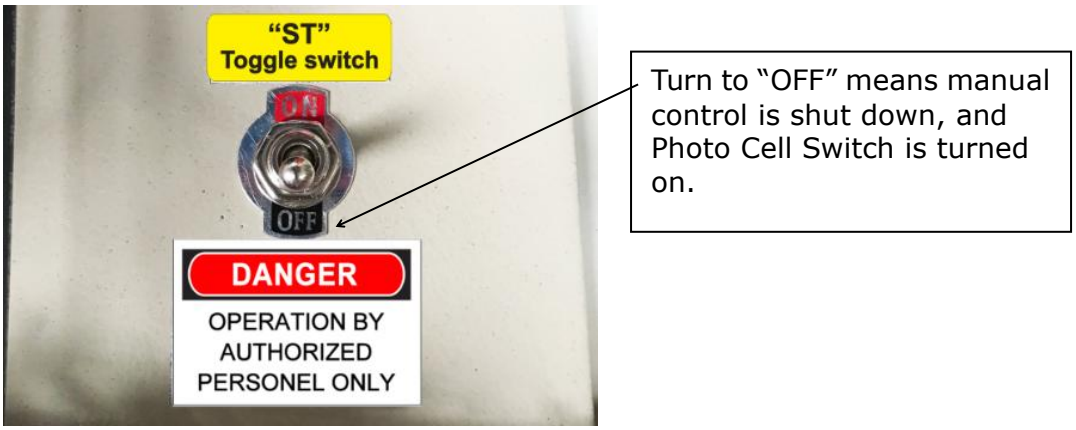

Fig.30

Remarks: When the lift in normal working and platform P1 and P2 become not leveling, the photo cell device protection effected, then power off. Open the panel of the control cabinet, turn the toggle switch to ON (see fig 23), power on. Reply the above synchronous adjustment again. Then turn the toggle switch to "OFF". (see fig.30)

C. Install anchor bolts.

1. Raise the lift to 1000mm then drill holes to install the anchor bolts (**See Fig.26**)

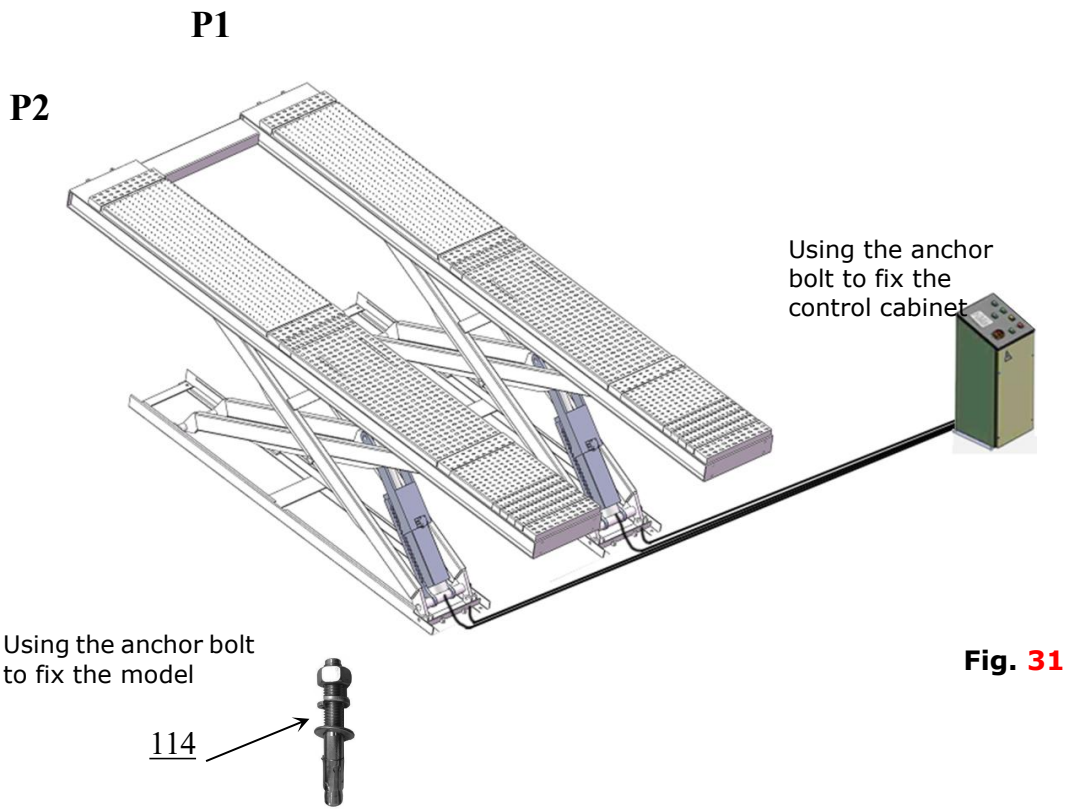

Fig. 31

Drilling the hole for the anchor bolt with the rotary hammer drill, type the anchor bolt into the ground.

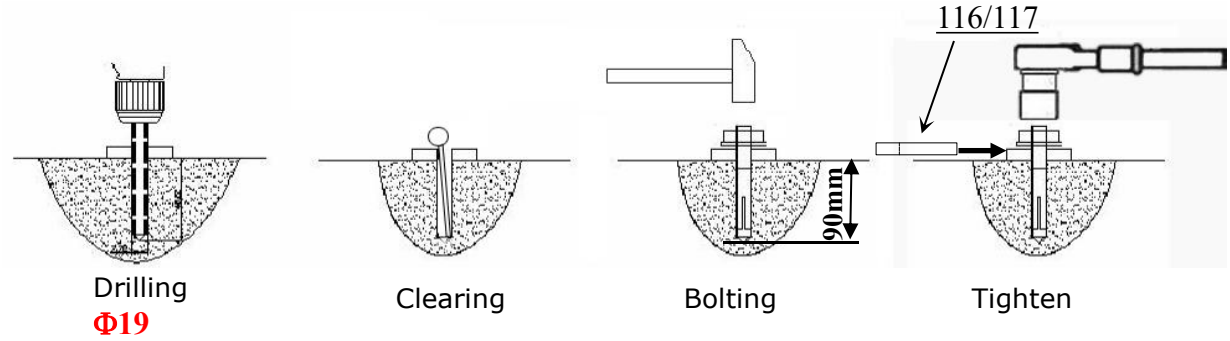

Anchor bolts for the lift: Use Φ19 driller to drill hole

Fig. 32

D. Check by level bar and adjust the lower leveling bolts(See Fig.34), use the shims to adjust the platforms until the front and rear of two platforms are in the same level. Adjust the Upper leveling bolts(See Fig.35) after it touch the Lower leveling bolts when lower to the lowest position. Then Tighten nut by wrench.

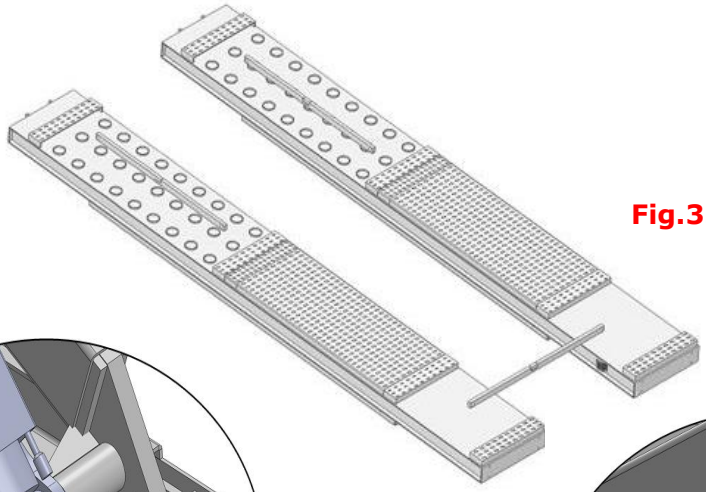

Fig.33

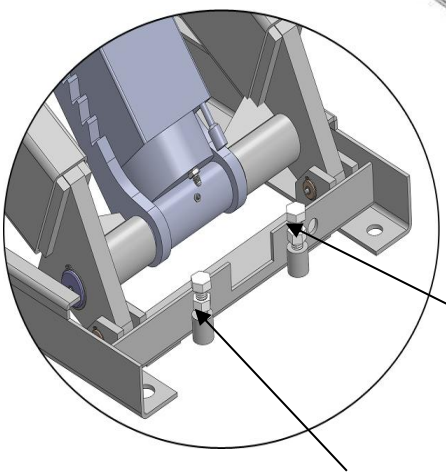

Fig. 34

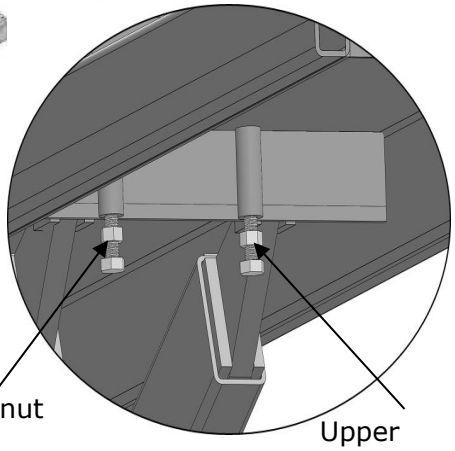

Fig. 35

Tighten the anchor bolts with spanner after leveling. (see fig 32)

Note: The tightening torque for the anchor bolt is 150N.m.
Tap anchor bolts into the ground at least 90mm deep.

E. Install oil hose cover (Only for In-ground installation).

a. Tidy up the oil hose and air line, covering the oil hose **(See Fig. 36).**

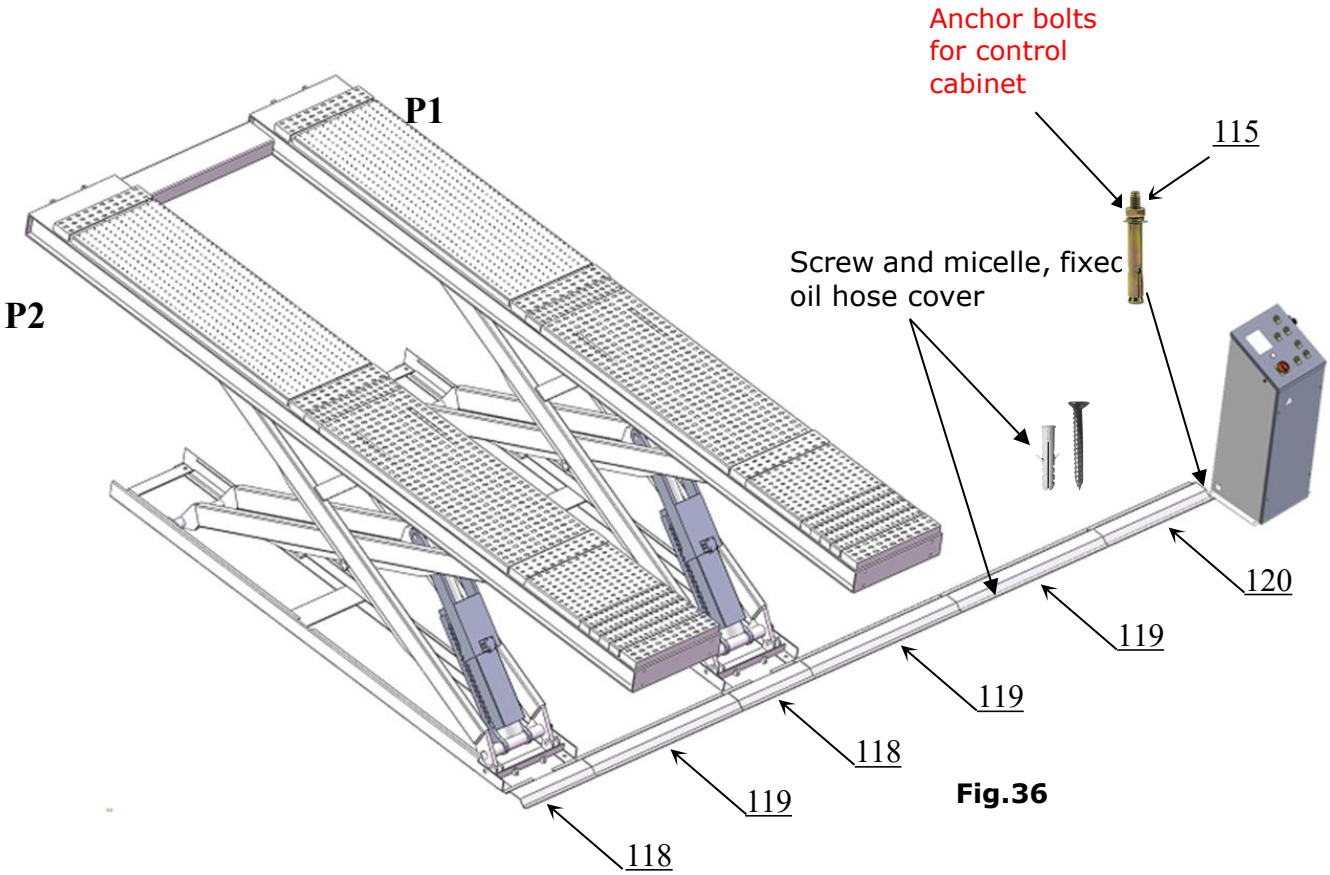

Fig.36

b. Install bolt of oil hose cover **(See Fig. 37)**.

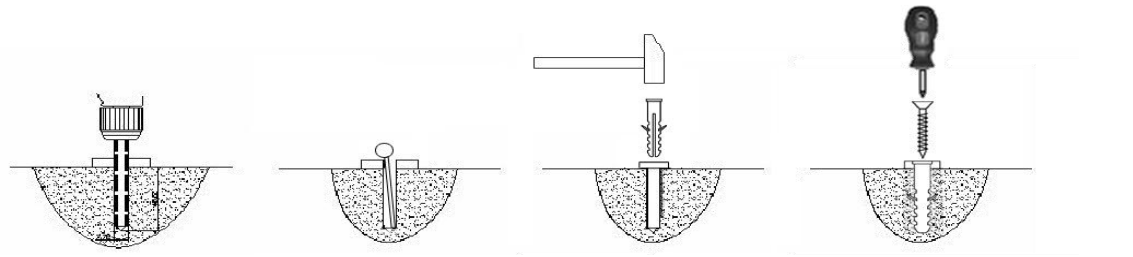

Drilling with Φ4 driller | Cleaning | Type the expansion colloidal screw | Fastening by Install the steel screw

Fig.37

c. Place the control cabinet onto the ground, drill holes for anchor bolts

Anchor bolts for the control cabinet: Use Φ10 driller to drill hole

F. Install platform connecting bar, limit rod of turnplate adjusting block . (fig 38)

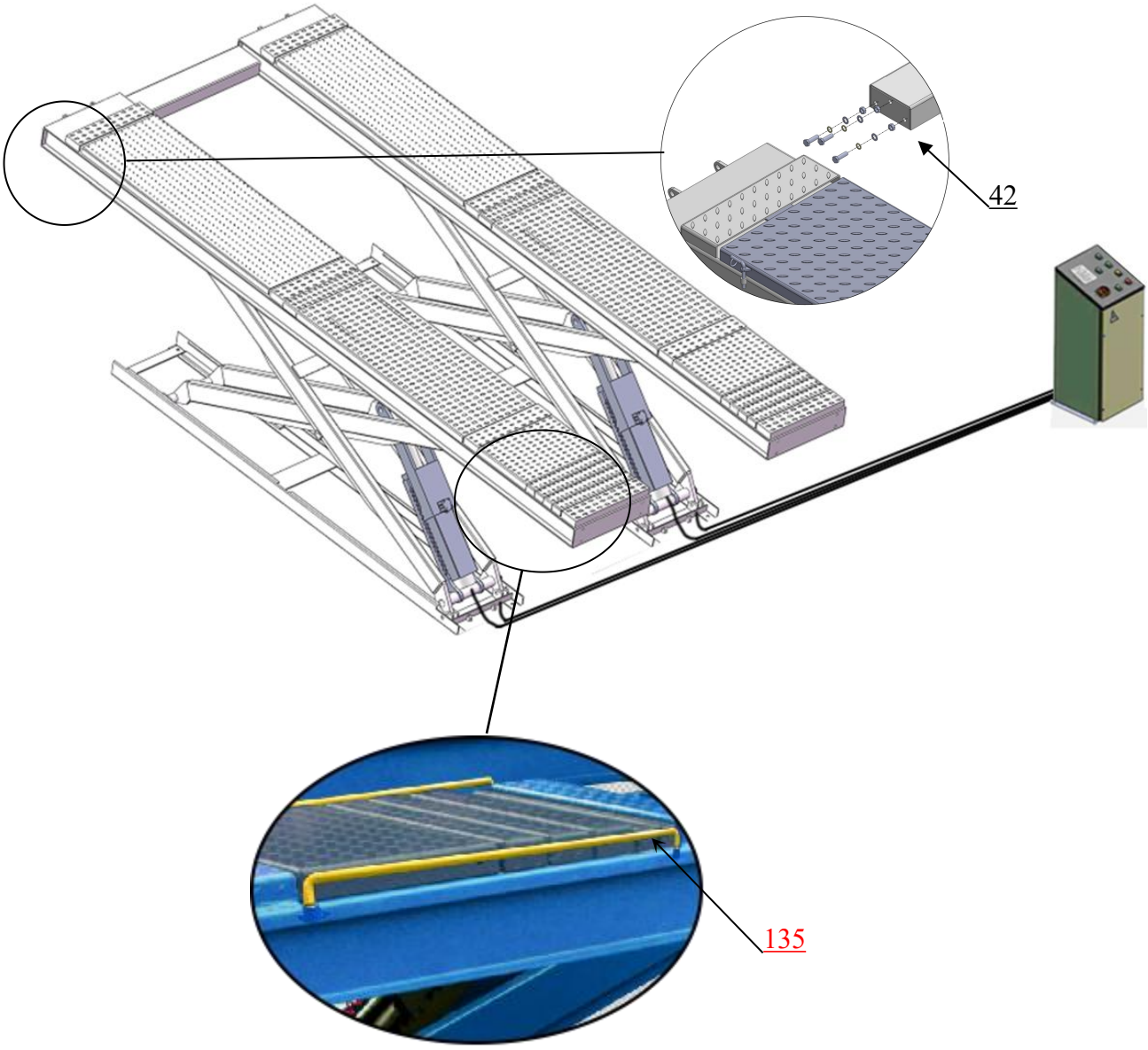

Install Limit rod

Fig.38

G. Test Run

Check the limit switch, the hose and air lines connection. If everything is no problem then do test run. The lift must be tested and checked carefully before in use.

V. EXPLODED VIEW

Model：DX-5500A

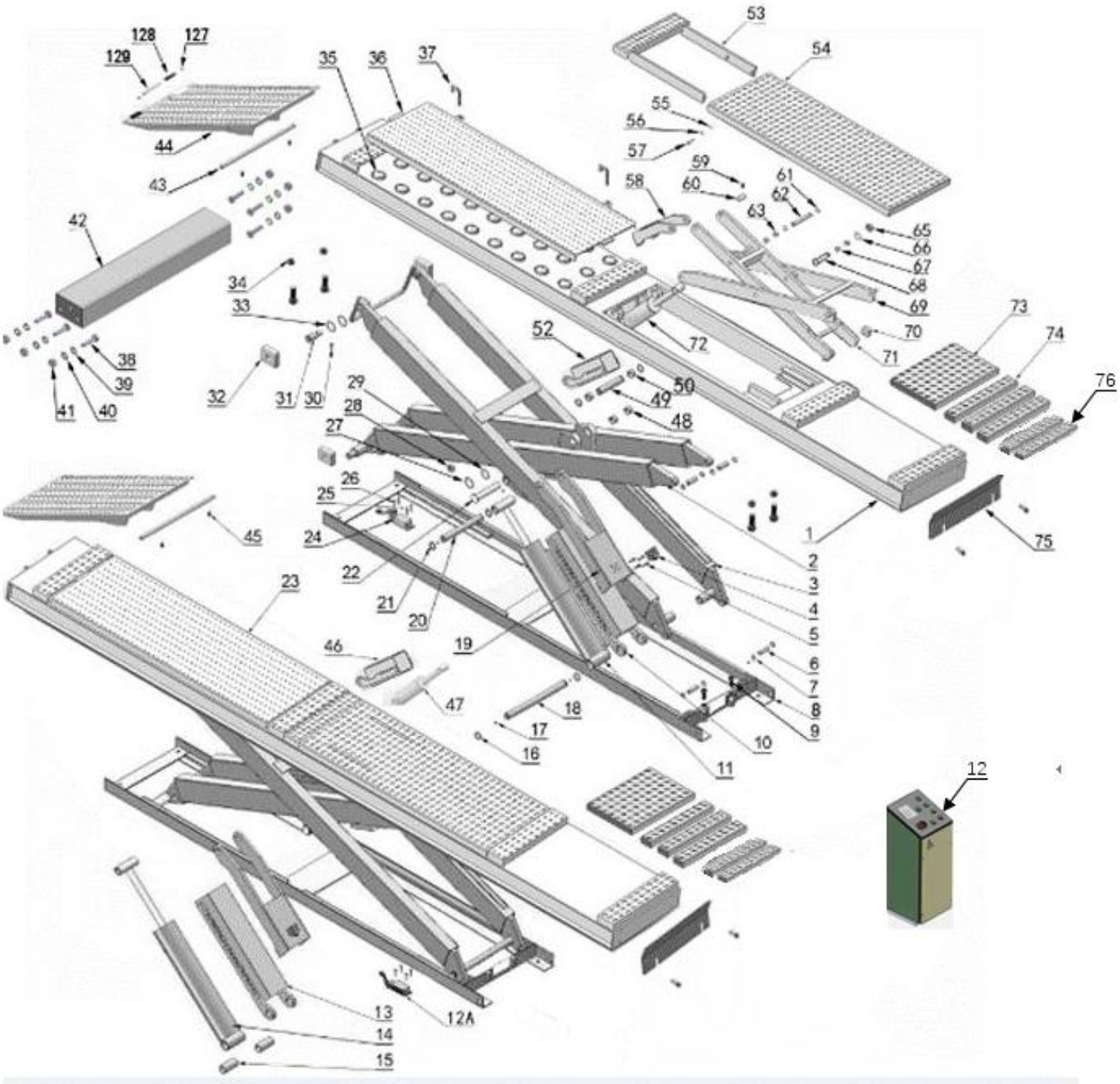

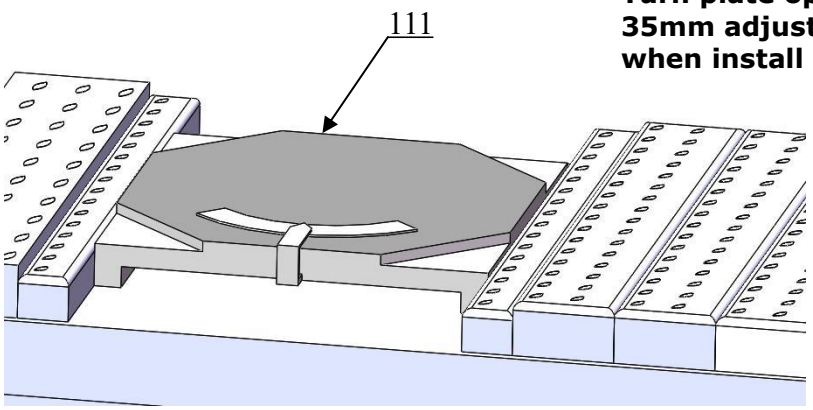

Turn plate optional parts (need one piece 35mm adjustment block on both sides when install the turn plate)

Fig. 39

Parts list for DX-5500A

Item	Part#	Description	QTY	Note
1	11580705	Power-side platform	1	
2	11580091	Inner Scissors(Main)	2	
3	11580092	Outer Scissors(Main)	2	
4	10520011	Air Cylinder	4	
5	10420153	Cup Head Bolt M6*20	16	
6	11580010	Pin for scissor	8	
7	10206032	Snap ring φ25	16	
8	11580034	Base frame	2	
9	10510012	Hex bolt M20*75	12	
10	11580703	Main Safety Lock Tube	4	
11	10580061	Main Cylinder	1	
12	10580008	3 Phase Control Cabinet (Without power	1 or 1	
	10580125	Single Phase Control Cabinet (Without		
13	10580109	Lower Limit Switch Assy.	1	
14	10580062	Secondly Cylinder	1	
15	11510022	Spacer bush for cylinder	4	
15A	11580071	Spacer for safety lock tube	2	
16	10520020	Snap Ring φ50	4	
17	10620064	Grease Fitting	32	
18	11580009	Connecting Shaft For Main Cylinder	2	
19	11580708	Safety Lock support plate	2	
20	11610005A	Connecting Pins for Cylinder	2	
21	10610098	Snap Ring φ35	8	
22	11580011	Connecting pin for inner and outer	4	
23	11580709	Off-side Platform	1	
24	10580108	High Limit Switch Assy.	1	
25	10620109	Cup Head Bolt M4*18	4	
26	10420164	Cup Head Bolt M4*30	4	
27	10530023	Washer Ø44*Ø35.5*2	4	
28	10610019	Self-locking nut M30*3.5	4	
29	10610108	Washer φ44*φ30.5*2	4	
30	10520108	Socket head cap bolt M8*10	8	
31	11580012	Connecting pin	4	
32	10530012	Slider	8	
33	10420023A	Washer φ36*φ65*2.8	8	
34	10420175A	Hex nut	12	
35	10420157	Steel Ball Set	60	
36	11570003	Slip Plate	2	
37	11520037	Pin for Slip Plate	4	
38	10420136	Hex bolt	10	
39	10206006	Washer Φ12	6	
40	10420026	Lock washer Φ12	6	
41	10206023B	Hex Nut M12	6	
42	11580031	Runway Connecting Bar	1	
43	11510006	Pin for connecting plate	2	
44	11520005A	Drive-in Ramp	2	
45	10201005	Split pin 4*50	4	
46	11580029	Safety device(secondly)	1	
47	10580019	Secondly cylinder for secondly scissors	1	

Item	Part#	Description	QTY	Note
48	10530042	Bronze bush Φ41.3*Φ35.1*28	4	
49	11580016	Connecting pin for cylinder bottom cap	2	
50	10420132A	Bronze bush Φ41.2*Φ35.1*20	4	
51	11510018	Guild Ramp (On-ground)	2	
52	11580028	Safety device (Main)	1	
53	11580030-01	Extend platform	2	
54	11580024-01	Platform for secondly scissors	2	
55	10209033	Washer Φ8	2	
56	10209034	Lock washer Φ8	2	
57	10201002	Hex bolt M8*16	2	
58	11580027	Safety support plate for secondly scissors	2	
59	10580005	Socket bolt M6*10	8	
60	11580015	Connecting pin	8	
61	10610008	Snap Ring φ30	4	
62	11580013	Connecting pin for piston rod	2	
63	10620141	Bronze bush Φ36*Φ30.1*24	4	
64	10580503	Parts box(On-ground)	1	
65	10620022	Slotted self-locking nut M24*2.5	4	
66	10640109	Washer φ44*φ25.5*2	4	
67	10203004A	Bronze bush Φ31*Φ25.1*21	16	
68	11580014	Main connecting pin	4	
69	11580707-01	Outer scissors for secondly scissors	2	
70	10580103	Slider (75*53*30)	8	
71	11580706	Inner scissors for secondly scissors	2	
72	10580018	Main cylinder for secondly scissors	1	
73	11580089	Turnplate cover	2	
74	11580090	Turnplate adjusting block	6	
75	11520004A	Tire stop plate	2	
76	11580097	Turnplate adjusting block 1	4	
77	10580048	90^0 Fitting	4	
78	10520065	Spring air line	2	
79	10520069	90° air fitting	3	
80	10580001	Black air line	1	
81	10610097	Hex nut M3	5	
82	10610101	Washer Ø3	5	
83	10510051	⑤ Oil hose assy. 1/4*1870	1	
84	10420124	T fitting	2	
85	10610099	Cup Head Bolt M3*20	5	
86	10510050	②Oil hose assy. 1/4*6135	1	
87	10510049	①Oil hose assy. 1/4*6215	1	
88	10211016	T fitting 1/4JIC(M)*1/4JIC(M) *1/4JIC(M)	2	
89	10510052	③Oil hose assy. 1/4*285	1	
90	10420119	Straight fitting for cylinder	1	
91	10510023	Straight fitting G3/8-19(M)*1/4JIC(M)	2	
92	10510052	④Oil hose assy. 1/4*285	1	
93	10620079	Straight fitting 1/4JIC(M) *1/4JIC(M)	2	
95	10580007	Spring air line	2	
96	10580006	Air line Φ6*Φ4*12150mm	1	
97	10580003	⑥Oil hose assy. 1/4*5500	1	
98	10420124	T Fitting	1	

Item	Part#	Description	QTY	Note
99	10580003	⑦Oil hose assy. 1/4*5500	1	
100	10580123	⑨ Oil hose assy. 1/4*6800	1	
101	10580124	⑩ Oil hose assy. 1/4*5350	1	
102	10420119	Straight fitting 3/8NPT(M)*1/4JIC(M)	1	
103	10209064	Straight fitting 1/4NPT(M)*1/4JIC(M)	2	
104	10580003	⑧ Oil hose assy. 1/4*5500	1	
105	10420145	Oil-water separator	1	
106	10420076	90° Fitting for air line	2	
107	10680005	Cup Head Bolt M6*10	6	
108	10420018	Self-locking nut M6	2	
109	10420146	Straight fitting for air line	1	
111	10420158	Turnplate (Optional)	2	
114	10209059	Anchor bolt 3/4*5-1/2	8	
115	10620071	Anchor bolt M10*100	4	
116	10201090	Shim (1mm)	20	
117	10620065	Shim (2mm)	20	
118	11580040	Oil hose cover L=520mm	2	
119	11540027	Oil hose cover L=1060mm	3	
120	11540025	Oil hose cover L=750m	1	
121	10620070	Rubber Screw φ6(On-ground)	36	
122	10620069	Wood bolt M4*30 (On-ground)	36	
123	11540029	Oil hose cover	1	
124	10610070	Rubber pad	4	
125	10620034	Rubber pad	4	
126	10580502	Parts box (In-ground)	1	
127	10209010	Snap ring	8	
128	10610667	Roller for Drive-in ramp	4	
129	11620043	Roller Pin for Drive-in ramp	4	
130	11580741	Cover of Photo cell device	2	
131	10580107	Photo cell device assy.	1	
132	10580106	High Limit Switch Assy.(Sub Lift)	1	
200	81523015	Power unit (Single phase)	1 or 1	
	81523016	Power unit (Three phase)		
133	11440090	Limit rod of turnplate adjusting blocks	4	

1 MAIN SCISSORS LIFT CYLINDERS

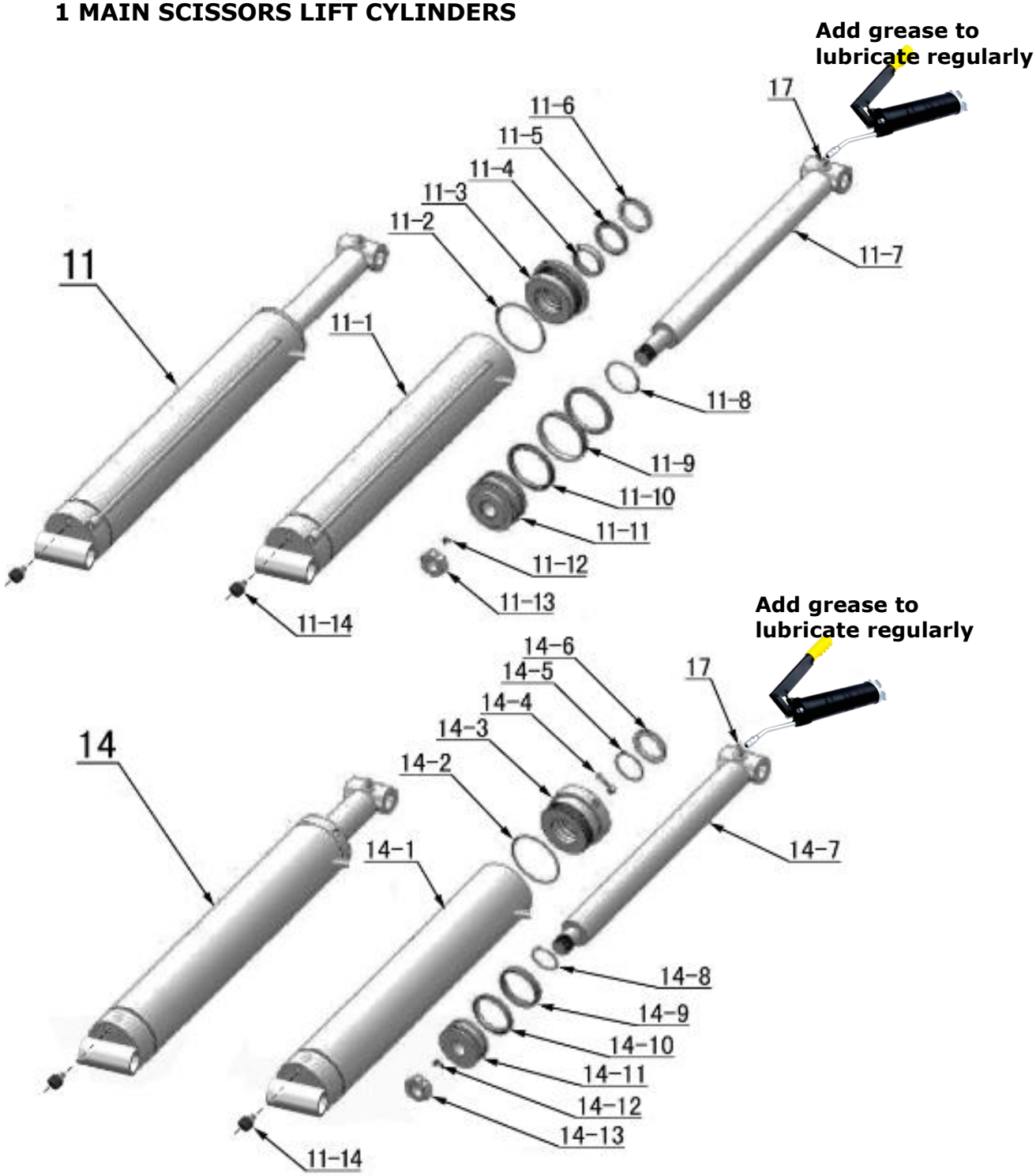

Fig. 40

Parts for Cylinder of main scissors				
Item	**Part#**	**Description**	**QTY**	**Note**
11-1	11580078	Main Cylinder tube	1	
11-2	10580066	O- Ring	1	
11-3	11580079	Head Cap(Main)	1	
11-4	10580069	Support Ring	1	
11-5	10580065	Y- Ring	1	
11-6	10580067	Dust Ring	1	
11-7	11580080	Piston Rod (Main)	1	
11-8	10520054	O- Ring	1	
11-9	10580068	Support Ring	1	
11-10	10580064	Y- Ring	2	
11-11	11580081	Piston	1	
11-12	10520049	Set Screw	1	
11-13	10520047	Hex Nut (Main)	1	
11-14	10530009	Burst valve	2	
14-1	11580082	Secondly Cylinder tube	1	
14-2	10520053	O- Ring	1	
14-3	11580083	Head Cap (Secondly)	1	
14-4	10201034	Bleeding Plug	2	
14-5	10580070	O- Ring	1	
14-6	10580067	Dust Ring	1	
14-7	11580080	Piston Rod (Secondly)	1	
14-8	10520054	O- Ring	1	
14-9	10520056	Support Ring	1	
14-10	10520055	Y- Ring	1	
14-11	11580084	Piston (Secondly)	1	
14-12	10520049	Set Screw	1	
14-13	10520047	Hex Nut (Secondly)	1	
14-14	10530009	Burst valve	1	

2 SECONDLY LIFT CYLINDER

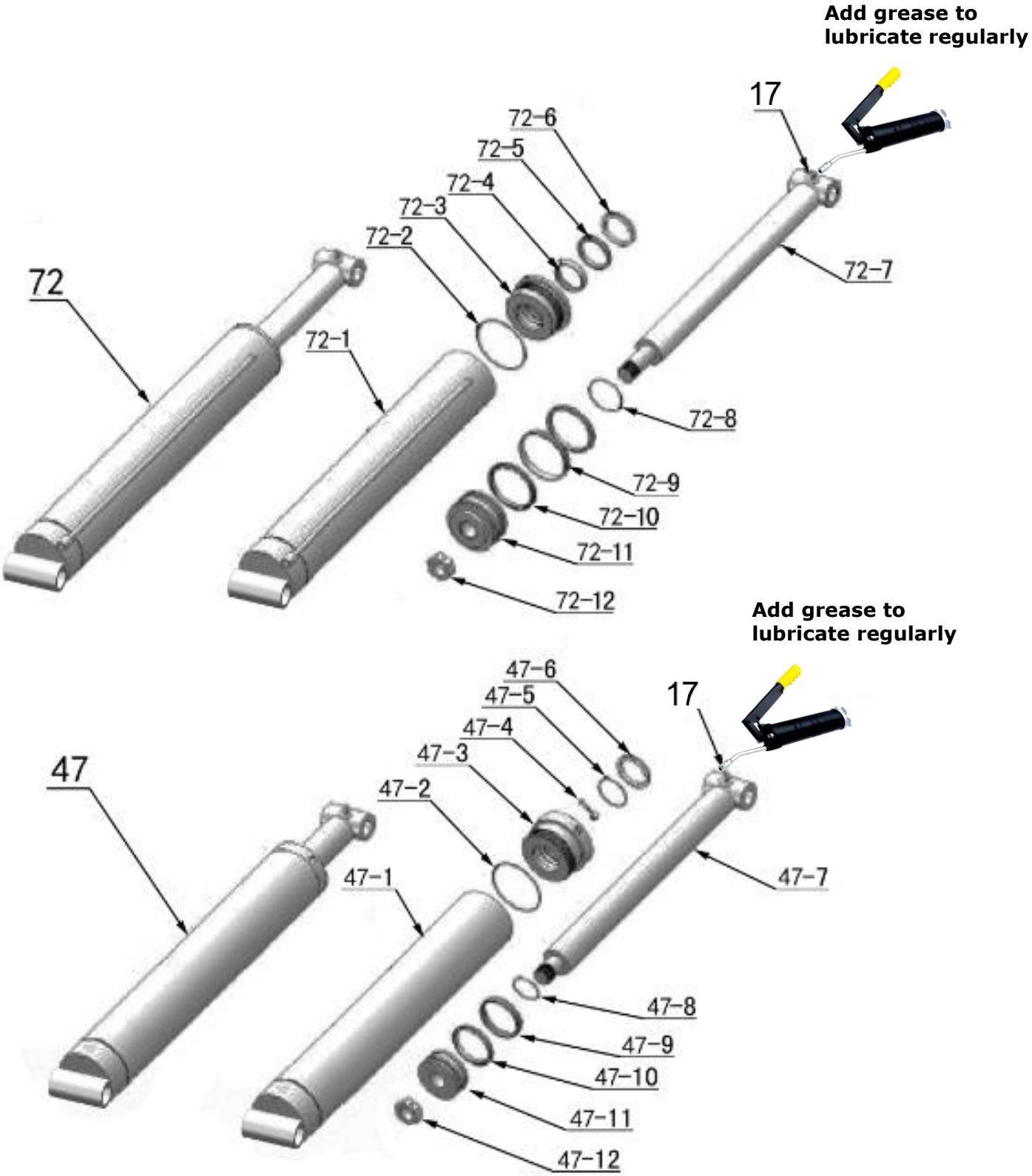

Fig. 41

Parts for Cylinder of secondly scissors				
Item	**Part#**	**Description**	**QTY**	**Note**
72-1	11580049	Main Cylinder	1	
72-2	10510059	O- Ring	1	
72-3	11580050	Head Cap	1	
72-4	10620047	Support Ring	1	
72-5	10620046	Y- Ring	1	
72-6	10209078A	Dust Ring	1	
72-7	11580051	Piston Rod	1	
72-8	10206069	O- Ring	1	
72-9	10510058	Support Ring	1	
72-10	10510057	Y- Ring	2	
72-11	11580052	Piston (Main)	1	
72-12	10206071	Hex bolt	1	
47-1	11580053	Secondly Cylinder	1	
47-2	10630027	O- Ring	1	
47-3	11630030	Head Cap	1	
47-4	10201034	Bleeding Plug	1	
47-5	10620058	O- Ring	1	
47-6	10209078A	Dust Ring	1	
47-7	11580051	Piston Rod	1	
47-8	10206069	O- Ring	1	
47-9	10620053	Support Ring	1	
47-10	10620054	Y- Ring	1	
47-11	11580054	Piston (Secondly)	1	
47-12	10206071	Hex nut	1	

3 CONTROL CABINET

10580125 Single phase

10580008 Three phase

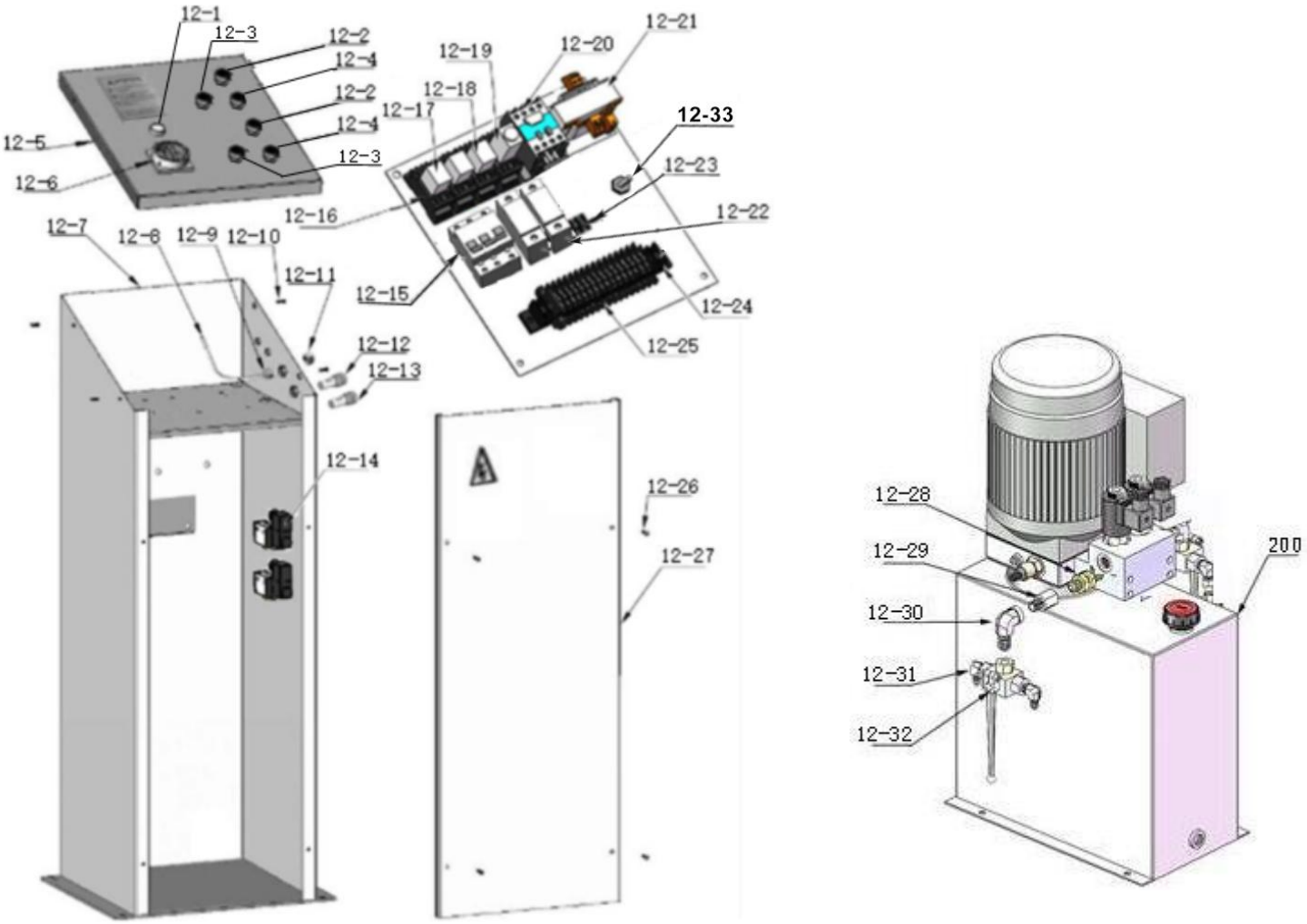

Fig. 33

Parts for control Cabinet				
Item	**Part#**	**Description**	**QTY**	**Note**
12-1	10201094	Power indicator	1	
12-2	10420071	Button **UP**	2	
12-3	10420071	Button **LOCK**	2	
12-4	10420072	Button **DOWN**	2	
12-5	52K001C	Control Panel	1	
12-6	41010217	Power Switch (QS)	1	
12-7	52K007D	Cabinet Body	1	
12-8	10420167C	Air Line	2	
12-9	1061K110	Straight Fitting For Air Line	1	
12-10	10209145A	Cup Head Bolt	4	
12-11	10420076	90° Fitting For Air Line	3	
12-12	10420143	Buzzes	1	
12-13	10420142	Lower alarm button	1	
12-14	10420077	Air solenoid valve	2	
12-15	10202046	Breaker 2P 25A (Single phase)	1	
	10202047	Breaker 3P 16A (3 phase)	1	
12-16	10420135	Base for time relay	4	
12-17	10420141	Intermediate Relay(KA1,2)	2	
12-18	41010492	Intermediate Relay(KA3)	1	
12-19	10420083	Time relay(KT)	1	
12-20	10420084A	AC contactor(KM)	1	
12-21	10580114	Transformer(TC)	1	
12-22	10202049	Breaker 1P	2	
12-23	10580101	Rectifier bridge	1	
12-24	10580112	Terminal strip	2	
12-25	10580113	Double terminal	1	
12-26	1052K056	Cup head bolt	4	
12-27	52K022	Front door	1	
12-28	10440009	Straight Fitting	2	
12-29	10630103	Transition fitting	1	
12-30	1052K027	90° Fitting	2	
12-31	10420097	90° Fitting	4	
12-32	10680065	Two-way valve	2	
12-33	10580100	Toggle Switch	1	

4 POWER UNIT (Part No.: 81523015/81523016)

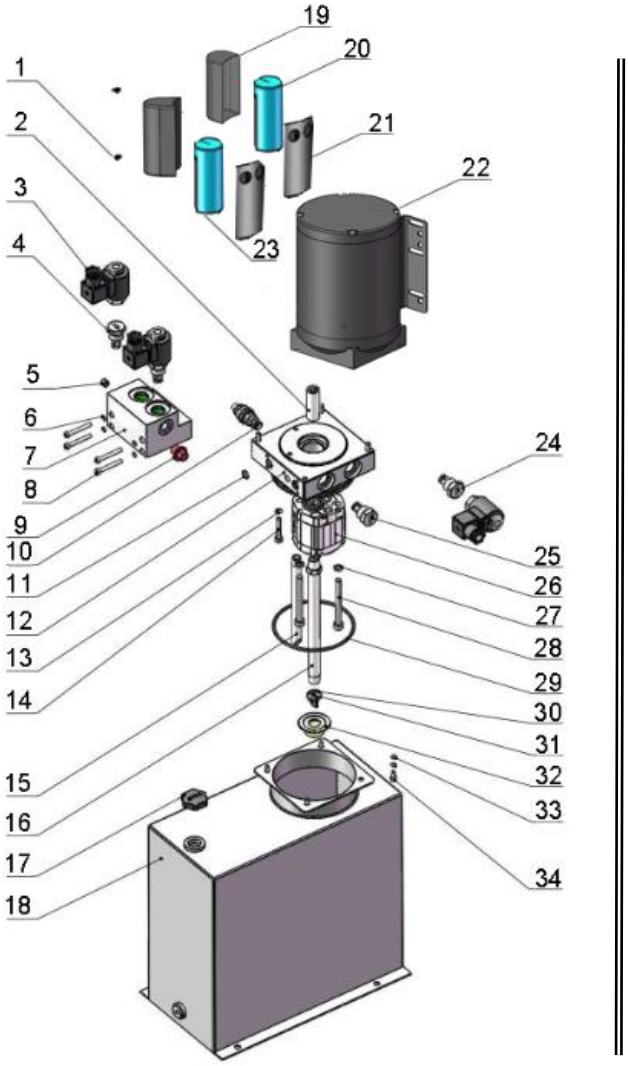

220V/50HZ/1 PHASE

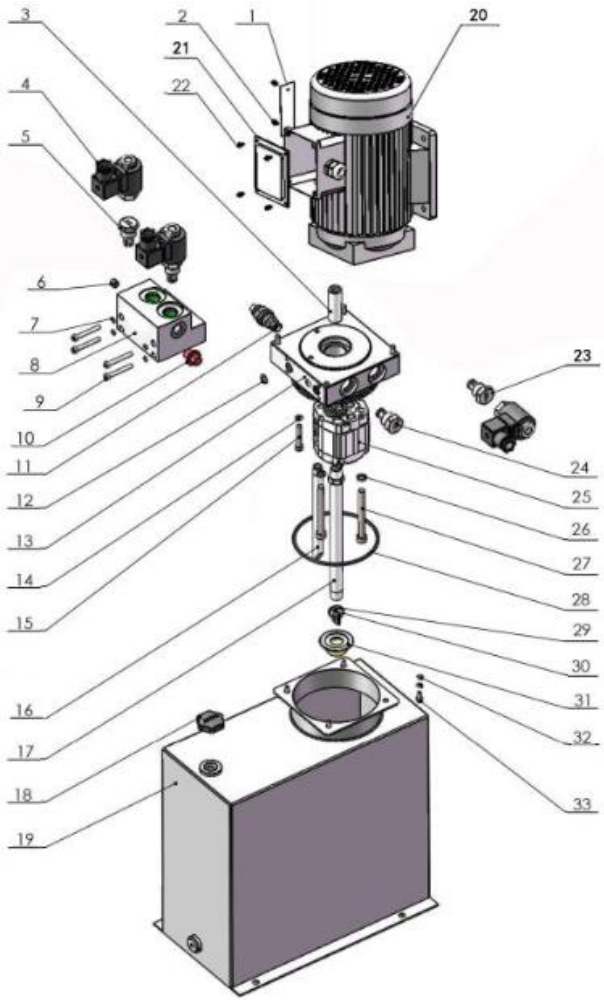

380V/50HZ/3 PHASE

Fig.43

220V/50HZ /1Phase Electric Power Unit Parts list

Item	Part#	Description	Qty.	Note
1	10420148	Cup head bolt with washer	4	
2	81400363	Motor connecting shaft	1	
3	81400420	Hydraulic Solenoid Valve Coil	3	
4	81400487	Dual way check solenoid valve	2	
5	81400333	Inner Hex Iron Plug	4	
6	10209143	Lock washer	8	
7	81400495	Secondly manifold block	1	
8	81400509	Socket bolt	4	
9	81400259	Red plug	2	
10	81400266	Relief valve	1	
11	81400344	O ring	2	
12	80101016	Main manifold block	1	
13	10209149	Lock washer	4	
14	85090142	Socket bolt	4	
15	81400376	Oil return pipe	1	
16	81400381	Oil inlet pipe	1	
17	81400263	Filter cap	1	
18	81400343	Oil tank	1	
19	81400066	Protective cover for capacitor	2	
20	81400250	Start capacitor	1	
21	81400180	Rubber pad	2	
22	81400590	Motor	1	
23	81400200	Run capacitor	1	
24	81400423	Solenoid release valve	1	
25	81400566	Check valve	1	
26	81400292	Gear bump	1	
27	10209034	Lock washer	2	
28	81400295	Socket bolt	2	
29	81400365	O ring	1	
30	10209152	Ties	1	
31	85090167	Magnet	1	
32	81400290	Filter	1	
33	10420152	Washer	4	
34	81400438	Hex bolt	4	

380V/50HZ /3Phase Electric Power Unit Parts list

Item	Part#	Description	Qty.	Note
1	81400286	Cover of Motor Terminal Box	1	
2	10420148	Cup head bolt with washer	4	
3	81400363	Motor connecting shaft	1	
4	81400420	Hydraulic Solenoid Valve Coil	3	
5	81400487	Dual way check solenoid valve	2	
6	81400333	Inner Hex Iron Plug	1	
7	10209143	Lock Washer	8	
8	81400495	Secondly manifold block	1	
9	81400330	Socket bolt	4	
10	81400259	Red plug	2	
10A	81400560	Throttle valve	1	
11	81400266	Relief valve	1	
12	81400344	O ring	2	
13	80101016	Main manifold block	1	
14	10209149	Lock Washer	4	
15	85090142	Socket bolt	4	
16	81400376	Oil return pipe	1	
17	81400381	Oil inlet pipe	1	
18	81400263	Filter cap	1	
19	81400343	Oil tank	1	
20	81400309	Motor	1	
21	71150055	Name plate	1	
22	81400300	Cup head bolt	2	
23	81400423	Solenoid release valve	1	
24	81400566	Check valve	1	
25	81400292	Gear bump	1	
26	10209034	Lock washer	2	
27	81400295	Socket bolt	2	
28	81400365	O ring	1	
29	10209152	Ties	1	
30	85090167	Magnet	1	
31	81400290	Filter	1	
32	10420152	Washer	4	
33	81400438	Hex bolt	4	

Illustration of hydraulic valve for power unit（220V/50HZ and 380V/50HZ）

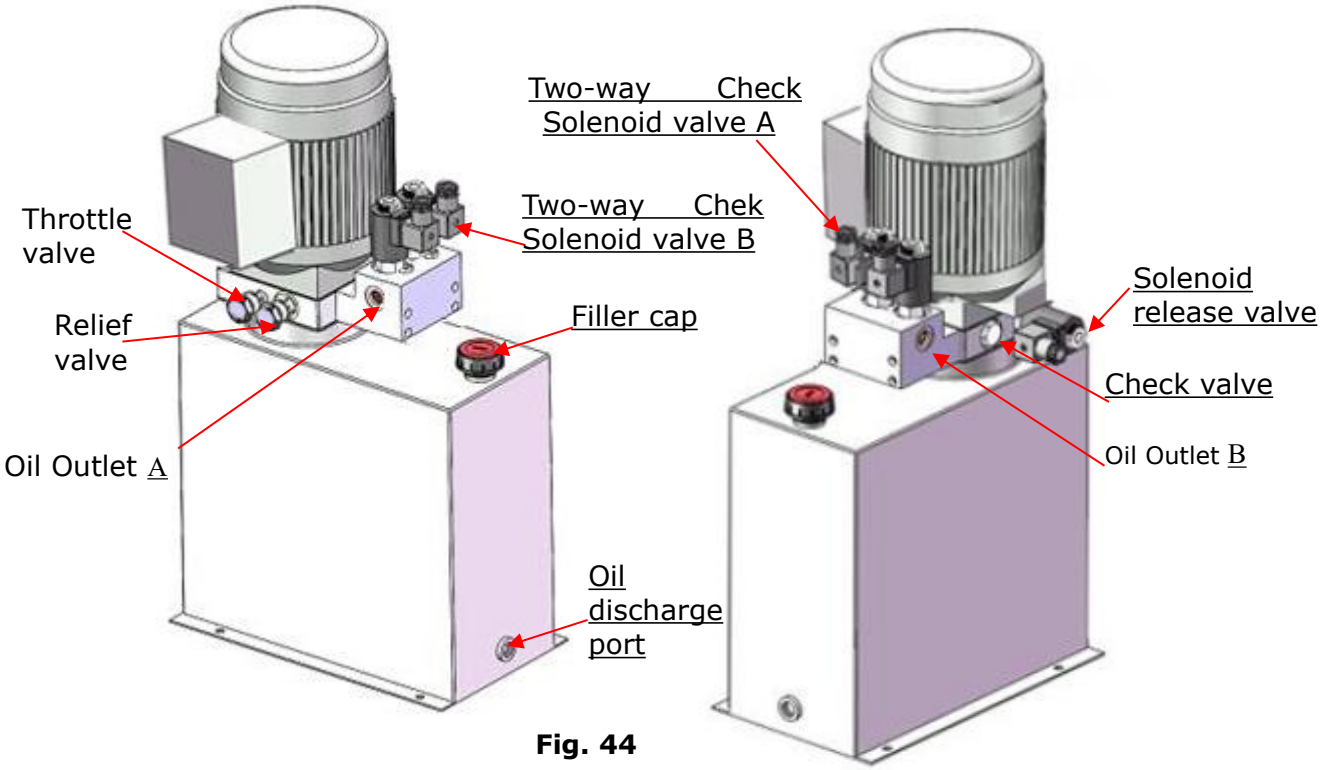

Fig. 44

VI. OPERATION INSTRUCTIONS

To lift vehicle

1. Keep clean of site near the lift, and down the lift to the lowest position.
2. Drive vehicle on the platforms and pull the brake.
3. Turn on the power and push the button "**Up**", raise the lift to the working position.
   Note: make sure the vehicle is steady when the lift is rising
4. Push the button **"Lock"**, lock the lift in the safety device. Make sure the safety device is locked in the same height.

To lower vehicle

1. Be sure clear of around and under the lift, only leaving operator in lift area.
2. Push the button "**Down",** the lift is lowered continually and stopped at the height 600mm from ground. Keep feet clear off lift, push button "**DOWN"** while push the **Lowering Alarm Button(PASS)** at the side of control cabinet, the lift is lowered to ground with alarm tone;
3. Drive away the vehicle when the lift is lowered to the lowest position.
4. Turn off the power.

VII. MAINTENANCE SCHEDULE

Monthly:

1. Re-torque the anchor bolts to 150 Nm.
2. Lubricate all moving parts with lubricant (See. Fig.45-48)

Each main scissor 12 positions, total 24; Each secondly scissor lift 4 positions, total 8.

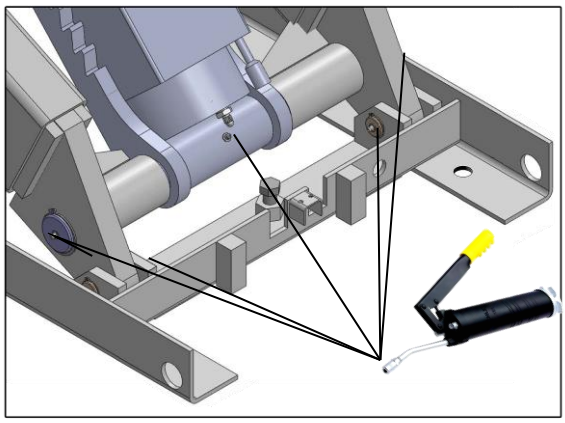

For main cylinder connecting pin

Fig.45

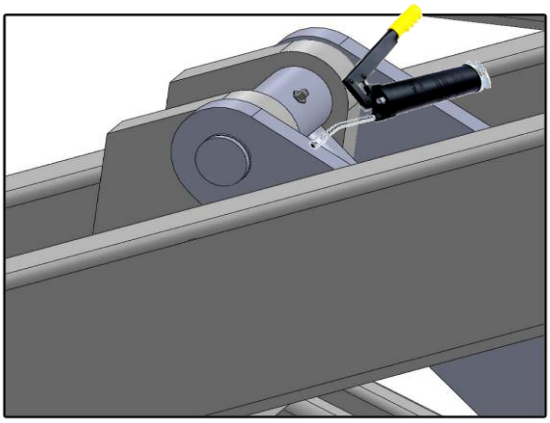

For pin of piston rod

Fig.46

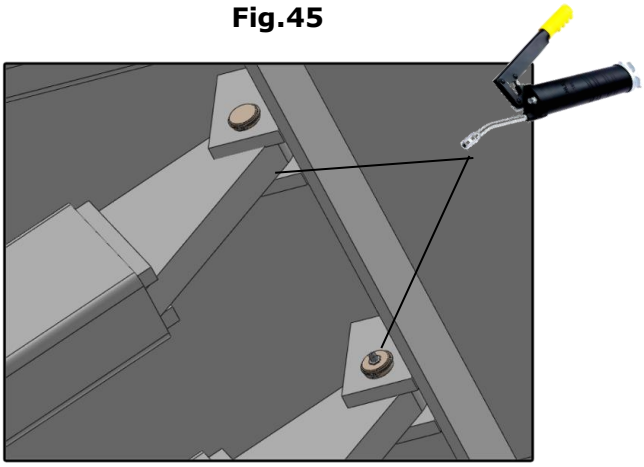

For pins of connecting platforms and scissors

Fig. 47

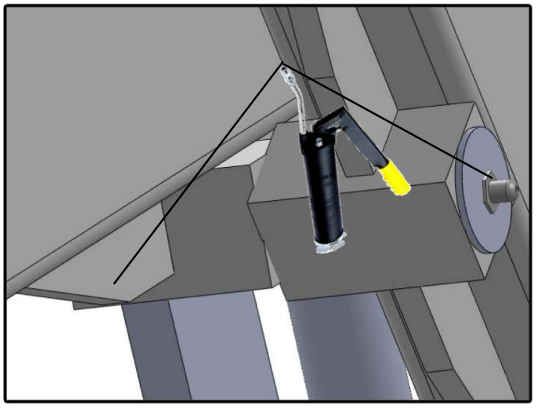

For connecting pins of scissors

Fig.48

3. Check all fittings, bolts and pins to insure proper mounting.
4. Make a visual inspection of all hydraulic hoses/lines for possible wear or leakage.
5. Adjusting the lifting level on both platforms.

Note: All anchor bolts should take full torque. If any of the bolts do not function for any reason, **DO NOT** use the lift until the bolts have been replaced.

Every six months:

1. Make a visual inspection of all moving parts for possible wear, interference or damage.
2. Check and adjust the platform as necessary to insure level lifting.
3. Check all fastener and re-torque.

VIII.TROUBLE SHOOTING

TROUBLE	CAUSE	REMEDY
Motor does not run	1. Star Button does not work 2.Wiring connections are not in good condition 3. AC contactor burned out 4. Motor burned out	1. Replace button 2. Repair all wiring connection 3. Repair or replace contactor 4. Repair or replace motor
Motor runs but the lift is not raised	1. Motor runs in reverse rotation 2. Low oil level 3. The Gear Pump out of operation 4. Relief valve or check valve in damage 5. Hydraulic solenoid valve out of operation	1. Reverse two power wire 2. Fill tank 3. Repair or replace 4. Repair or replace 5. Repair or Replace
Lift does not stay up	1.Hydraulic solenoid valve out of operation 2.Relief valve or check valve leakage 3.Cylinder or fittings leaks	Repair or replace
Lift raised slowly	1. Oil line is jammed 2. Gear Pump leaks 3. Overload lifting 4. Power voltage low 5. Oil mixed with air	1. Clean the oil line 2. Repair or replace pump 3. Check load 4. Check electrical system 5. Fill tank and bleeding air
Lift cannot lower	1. Hydraulic solenoid valve out of operation 2. Air solenoid valve out of operation 3. Air cylinder in damage 4. Air line leaking	1. Repair or replace 2. Repair or replace 3. Repair or replace 4. Check the air line

IX. Lift disposal.

When the car lift cannot meet the requirements for normal use and needs to be disposed, it should follow local laws and regulations.

PEAK CORPORATION

No. 3 Luomu Road,Shishan Town,Nanhai District,Foshan(528225),Guangdong,China

Tel:86-757-81102815 81102805

Fax: 86-757-81102809

Manual Part No.: 72259007
Revision Date: 2022/05